anti

ANTI WAVE - SINCE MUNICH 1972

SWIM • POLO • POOL DECK • LEISURE • BULKHEAD

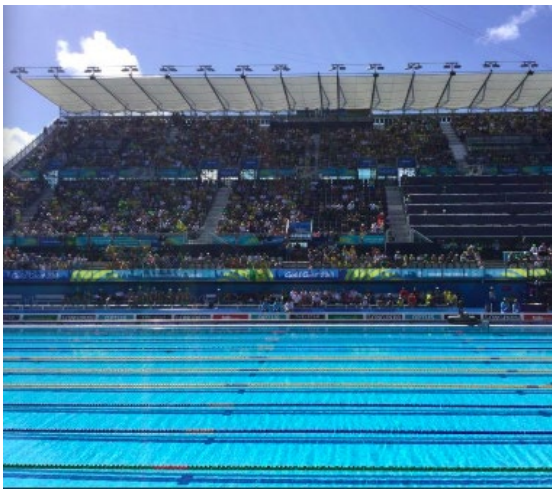

Anti Wave International Pty Ltd
2022 Catalogue

anti
ANTI WAVE - SINCE MUNICH 1972
SWIM • POLO • POOL DECK • LEISURE • BULKHEAD

When performance counts pools choose Anti Wave

Specialists in complete pool fit-outs for competition & training aquatic facilities around the world

BROCHURE CONTENTS PAGE

RACING LANES 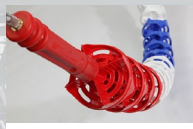 7

POOL FITTINGS 10

STARTING BLOCKS 11

POOL DECK EQUIPMENT 18

OVERFLOW GRATINGS 21

WATER POLO 25

FRP BULKHEADS 38

SUBMERSIBLE SWIMWALLS 39

ENDWALLS 40

LEISURE 41

ORDERING INFO 43

anti
ANTI WAVE - SINCE MUNICH 1972
SWIM • POLO • POOL DECK • LEISURE • BULKHEAD

Anti Wave International

Performance Aquatic Sports Equipment

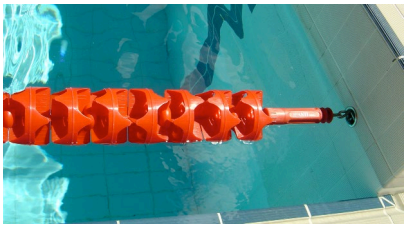

Anti Wave Maxi Racing Lanes with SuperTensioner

South East Asian Games Venue, Clark City, 2019 Swim and Polo Fitout

Anti Wave MAXI Racing Lanes with SuperBlock 800, FINA Event

Anti Wave International has been the world leader in the design and manufacture of aquatic technologies since 1972, when Anti Wave first supplied competition swimming and polo equipment to the Munich Olympic Games venue.

Since then, Anti Wave designs and equipment have been used extensively in Olympic and other major international swimming competitions, and continue to set the benchmark for quality and innovation around the world.

Anti Wave products are designed and tested in Australia, and have been exported to over 150 countries through a widespread networks of Authorised Resellers and Licensees.

Anti Wave aquatic equipment range caters to both local and international pools. Anti Wave products are the result of over 50 years of industry leading innovation & development, installation and use around the world.

Anti Wave equipment has been selected for the Sydney 2000, Beijing 2008, London 2012 Olympics, Glasgow 2014 Commonwealth Games, Doha Aspire Centre Qatar 2016, South East Asian Games Complex, KL 2017, 2018 FINA World League Inter-Continental Cup Polo Venue Auckland NZ & 2018 Gold Coast Commonwealth Games, Gold Coast, Australia, 2019 South East Asian Games Venue, Phnom Penh, Cambodia, 2021. Official Goals and Field lines for USA Water Polo, USA 2020-2024.

Official Polo Field and Goal of USA Water Polo 2021-2024

Anti Wave International Pty Ltd

Anti Wave International Pty Ltd
Address : 65 Twelfth Avenue, St Lucia QLD Australia 4067
Web: www.anti.to
Email : anton@anti.to
Mobile : +61 424 173 625

Anti Wave holds the following international Patents: 2001285610, 7100219, 4048677. 01818714 and 2003/2920

With a global network of Approved Distributers and Licencees around the world.

To find your closest Reseller please visit:

www.anti.to or email anton@anti.to

Anti Wave...
When performance counts:

Official Polo Field and Goals of USA Water Polo 2021-2024

1972	Munich Olympics—Germany
1973	World Championships Belgrade—Jugoslavia
1974	Asian Games Teheran—Iran
1975	World Championships Cali—Colombia
1976	Montreal Olympics—Canada
1976	World Championships Berlin—Germany
1978	Asian Games Bangkok—Thailand
1979	Pan-American Games—Puerto Rico
1980	Moscow Olympics—Russia
1981	Olympic Pool Taipei - Taiwan
1982	Commonwealth Games Brisbane - Australia
1983	Olympic Indoor Pool Vancouver—Canada
1984	Los Angeles Olympics—USA
1985	Olympic Pool Tokyo—Japan
1986	European Championship Bonn—Germany
1987	Fortitude Valley Pool Brisbane—Australia
1988	City Bath Rotorua—New Zealand
1988	Superdrome Perth—Australia
1988	Seoul Olympics—South Korea
1988	International Aquatic Centre Amersfoort—Netherlands
1988	University Recreation Centre Sydney— Australia
1989	Kilbernie Aquatic Centre Wellington - New Zealand
1989	Blackall Regional Aquatic Centre—Australia
1990	Seattle Goodwill Games—USA
1991	World Championships Perth—Australia
1992	UNESCO Ford Price Award for Ecological Venue
1993	New Plymouth Leisure Complex—NewZealand
1994	Sydney Olympics 2000 Aquatic Complex— Australia
1994	Aquatic Centre Warringah—Australia
1995	International Aquatic Centre Penang—Malaysia
1996	Melbourne International Aquatic Centre—Australia
1996	Albany Creek Aquatic Centre Pine Rivers— Australia
1996	Somerville House Sports Centre Brisbane— Australia
1997	Australian Championships Brisbane—Australia
1997	Aquatic Centre Invercargill—New Zealand
1998	World Championships Perth—Australia
1998	Goodwill Games New York—USA
1998	Commonwealth Games Kuala Lumpur—Malaysia
1999	World Championships Perth—Australia
1999	World Cup Sydney & Hobart—Australia
1999	South-East Asian Games—Brunei
1999	Pan-Pacific Games Sydney—Australia
1999	Southport Olympic Pool—Australia
1999	Aquatic Centre Kalgoorlie-Boulder Australia
1999	Cook & Phillip Park Sydney - Australia
1999	Regional Aquatic Centre Caboolture—Australia
2000	Sydney 2000 Olympic Games Aquatic Centre—Australia
2001	QEII Pool Christchurch—New Zealand
2002	Aquatic Centre Gorzow Wielkopolski—Poland
2003	National Training Centre Beijing —China
2003	Regional Aquatic Centre Lismore—Australia
2005	Australian Institute of Sport Canberra—Australia
2005	Chandler Aquatic Centre, Brisbane - Australia
2005	China National Game Nanjing - China
2006	Womens Water Polo Cup Tianjing - China
2006	Wendu Water City Beijing—China
2007	Canadian Spring Nationals Competition - China
2007	13th FINA World Championships - Melbourne, Australia
2007	Preselection Comp forBeijing 2008 Olympics - China
2007	Huangpu Aquatic Centre Shanghai—China
2007	Macau National Centre—China
2007	Special Olympics World Games Shanghai - China
2007	China City Game 2007 Wuhan - China
2007	FINA World Cup - Singapore
2008	Beijing 2008 Olympics - Water Cube Beijing 2008 - China
2009	Macao National Pool (Bulkhead) - China
2009	Singapore - FINA World Cup - Singapore
2010	Singapore - First Youth Olympic Games - Singapore
2010	Commonwealth Games - Delhi- India
2010	FINA World Cup Beijing - Beijing WaterCube - China
2010	FINA World Cup Singapore - Singapore
2010	First Youth Olympic Games, Singapore
2011	Southeast Asian Games, Indonesia
2011	FINA World Cup 2011, Singapore
2011	FINA World Cup 2011, Beijing Water Cube - China
2012	FINA World Cup Singapore - Singapore
2012	FINA World Cup, Beijing Wate Cube - China
2012	London 2012 Olympic Games, London.
2013	Myanmar- SE ASIAN GAMES - Equipment and Bulkhaed
2014	Glasgow Commonwealth Games, Scotland, UK
2014	Asian Games, Incheon, South Korea
2015	FINA World Cup 2015, Beijing China (September)
2015	FINA World Cup 2015, Singapore (October)
2016	Doha Aspire Complex, Doha, Qatar
2016	China Nat. Swimming Championships, Road to Rio Olympics
2016	Australian Swimming Championships, Brisbane, Australia
2016	FINA World Cup 2016, Singapore
2016	FINA World Cup, Beijing, China
2017	2017 South East Asian Games Venue, Kualur Lumpur, Malaysia
2017	29th Summer Universiade, Taipei, Taiwan
2017	FINA World Cup 2017, Beijing, China
2017	FINA World Cup 2017, Singapore
2018	FINA World Cup 2018, Singapore
2018	FINA World Cup 2018, Beijing, China
2018	2018 Commonwealth Games Venue, Gold Coast, Australia
2018	2018 FINA World League Inter-Continental Water Polo Venue
2018	Pan Pacific Youth Water Polo Championships, NZ
2018	Australian Youth Water Polo Championships.
2018	Australian Swimming Championships, Brisbane, Australia
2019	Hamad Aquatic Centre, Dubai UAE
2019	FINA SE Asian Age Champs, Clark City, Philippines
2019	FINA SE Asian Games, Clark City, Philippines.
2020	Official Polo Field and Goals of USA Water Polo, USA
2021	Australian Swimming Championships, Gold Coast, Australia
2021	Official Field Line and Goals of USA WaterPolo, USA
2021	Italian National Polo League Venues, Italy.
2021	USA WaterPolo Junior Olympics, California, USA

FINA World Cup Venue, Anti Wave SuperBlock 800 and MAXI Racing Lanes

2019 SEA Games Venue, Clark City

2018 Commonwealth Games, Australia

ANTI WAVE - SINCE MUNICH 1972
SWIM • POLO • POOL DECK • LEISURE • BULKHEAD

Anti Wave around the world...

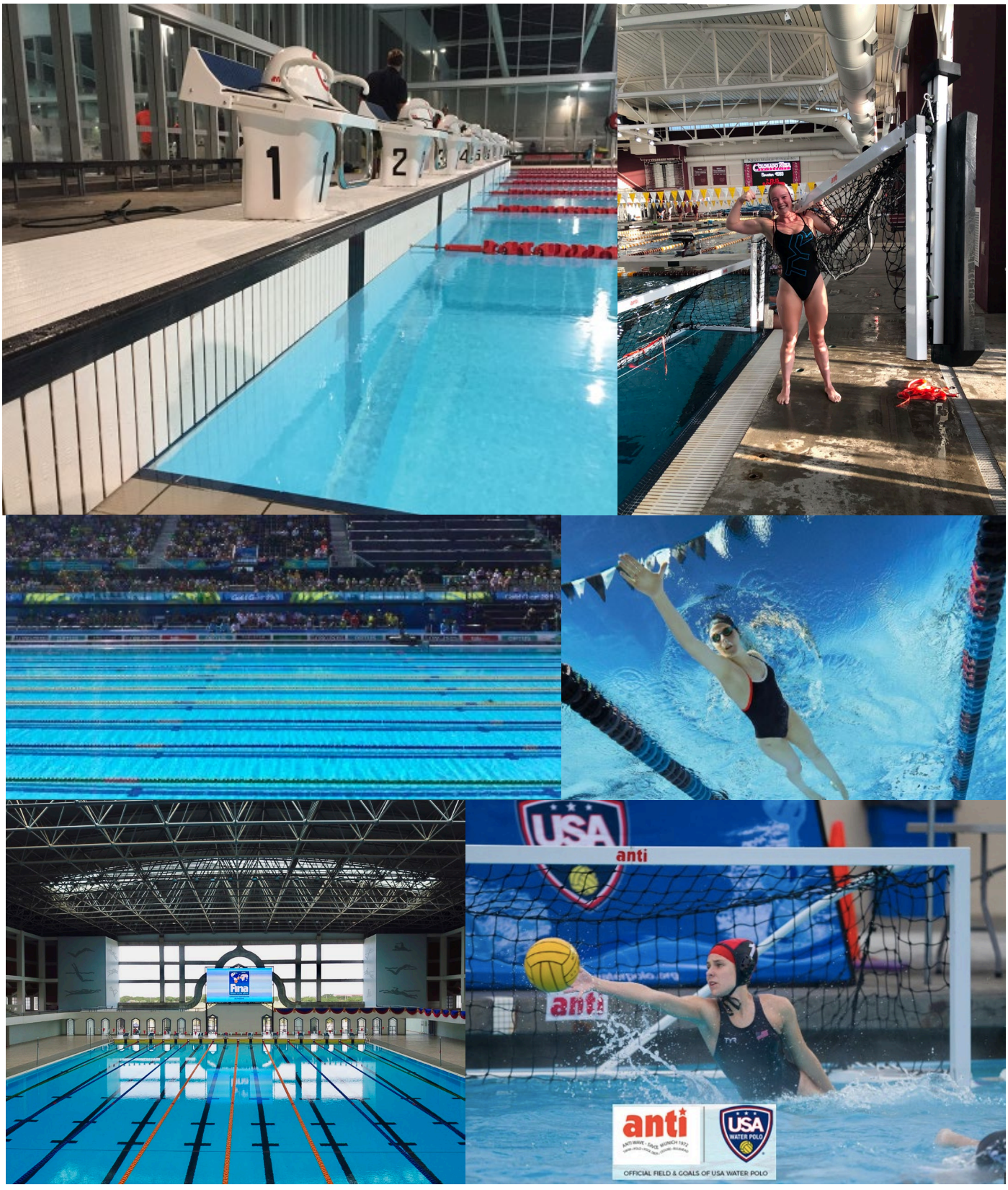

Anti Wave Racing Lanes

Anti Wave MIDI & MAXI Lanes - the original and the best

When performance counts...pools choose Anti Wave

The original and the best swimming racing lane currently available today. World renowned quality and innovation.

Our latest MAXI and MIDI model racing lanes represent the cutting edge of racing lane design and feature the most sophisticated, top performance, wave dissapation technology enlisted by any lane maker currently available. Comply with all FINA, LEN and equivalent regulations. Proven top performance equipment for fast pools.

Unique Patented design features create multidimensional barrier against waves by dispersing them along the lane line, through each individual freely spinning lane disc, and then down into the water. Unparalleled performance.

- Our world leading MIDI & MAXI Lane selected for FINA World Cup, Olympic Games and other top venues, as well as quality school, university, club and private facilities around the world. Best global availability.
- Equipped with original patented SuperTensioner - for safe and easy lane installation, tensioning and removal.
- The MIDI110mm is suitable for training, competition, water polo and general pool division.
- The MAXI150mm is designed for optimal water dissapation and wave control in high turbidity competetive environments (shown above), such as top National and International FINA competition venues.
- All discs are made from top specification and highest durability UV Stabilised advanced thermoplastics.
- Patented Lane design ensures optimal wave dispertion as well as maximum swimmer comfort.
- Designed and tested in Australia to withstand the harshest conditions, for years of quality service.
- Cable is SS316 with diameter of 3.1mm and max force of 5kn - allowing higher tension than other brands and more effective wave dissapation than older style ratchet type tensioners with lower tensioning capabilities.

Anti Wave SuperTensioner

The worlds favourite tensioner!

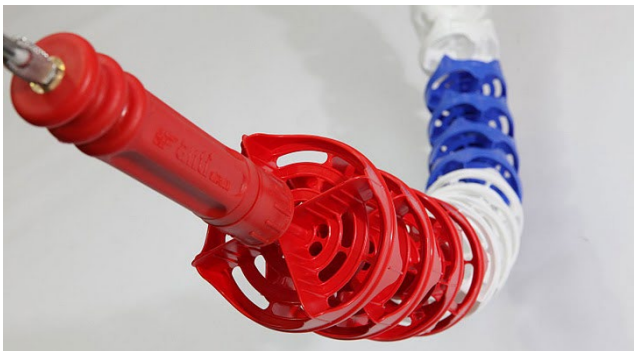

SuperTensioner Specifications:

- Threaded SS316 Rod allows safe, simple and secure adjustment of lane ropes with no tool needed.
- Stainless Steel Rod with brass ferrule and durable glass filled polycarbonate body construction.
- Cable is SS316 with diameter of 3.1mm and max force of 4Kn.
- Supertensioner body length including lock nut collar is only 230mm.
- All fittings are marine grade SS316.
- SuperTensioner is tested up to 4kN line pressure, allowing high performance wave dissapation, higher than archaic ratchet type.

The original and the best. The SuperTensioner is unique to Anti Wave.

Anti Wave SuperTensioner provides simple problem free tensioning of stainless steel lane cables and lane ropes and is superior to outdated 'turn-buckle technology', still used by other lane makers.

- Safe to adjust and secure and tamper proof once set at desired tension. No tool to be lost.
- Exact tension level of each lane is able to be confirned by quick visual inspection of each tensioner from pool deck. Tension of each lane is locked onto place securely by tension lock collar.
- Can't be released accidentally. All other archaic ratchet-type tensioning devices can be 'tripped' accidentally, often resulting in a mess of cable and ratchet teeth. With its lock-collar feature, this simply cannot happen with the Anti Wave SuperTensioner.

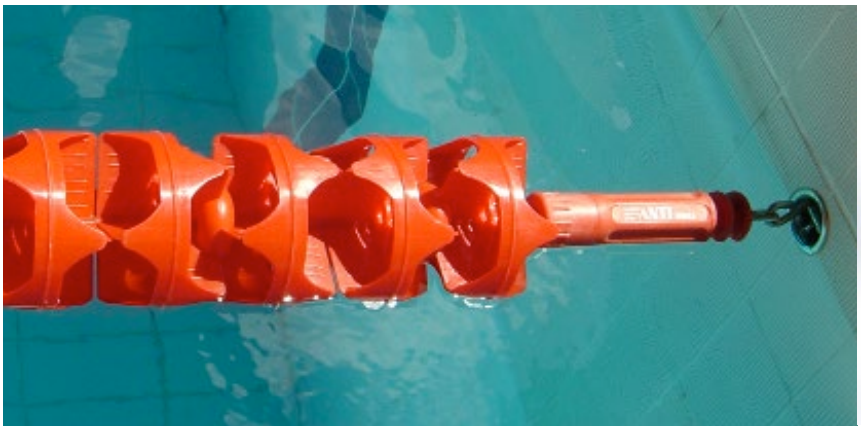

Anti Wave Racing Lanes

Ordering Information:

CODE	PRODUCT	DESCRIPTION	WEIGHT	VOLUME
AWE001	25 m MIDI	Anti Wave Racing Lane 110mm diameter	29 kg	0.34 m^3
AWE002	25 m MAXI	Anti Wave Racing Lane 150mm diameter	34 kg	0.62 m^3
AWE003	50 m MIDI	Anti Wave Racing lane 110 mm diameter	57 kg	0.68 m^3
AWE004	50 m MAXI	Anti Wave Racing lane 150 mm diameter	68 kg	1.20 m^3
AWE01C	Custom	Custom lengths and configurations please enquire	-	-
AWE005	SuperTensioner	Lane tensioner with Short Clamp set	0.06kg	0.001 m^3
AWE009	LONG Clamp	Supplied with SS Hook	0.1kg	0.001 m^3

Anti Wave Lanes are supplied fully assembled with the Patented SuperTensioner on one end of the lanes, and Long Clamp with SS Hook assembled on the other end, ready for installation to the pool.

SuperTensioner

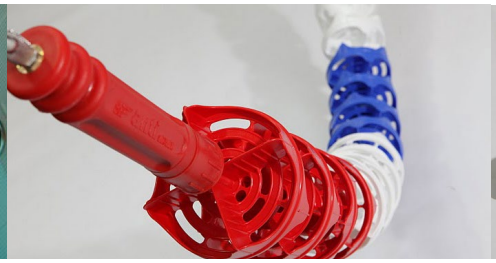

Anti Wave Racing Lanes Assembly

Long Clamp w SS Hook

Donut Float & Lane Disc

The MIDI 110mm diameter Racing Lane is suitable for general lane division and swimming.
The MAXI 150mm diameter Racing Lane is designed for optimal water dissapation for National and International competition. Premium top performance Model suitable for FINA events and equivalent.

- Standard colours: Red 5m ends with White and Blue 1m sections alternating. 25m Lanes orders have red marks at 15m position, 50m orders have red marks at the 15m, and 25m postions.
- FINA Multicolour: available on request, customs colours also available on request.

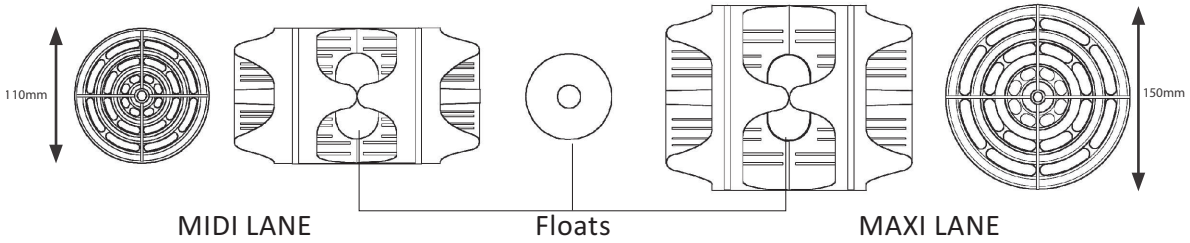

Pool Deck Fittings

Lane Anchor SS316

Anti Wave Lane Anchors provide secure flush anchoring to the pool for lane ropes and goal lines.

- SS316 Lane Anchor with 48.8mm inner dia x 72mm body length. Overall length with Booker Rod 125.5mm
- Optional Booker Rod may be used if required
- Secure lane attachment for non-overflow type pool.
- Suits all Anti Wave lanes and most other brands

Lane Anchor SS316 Dims

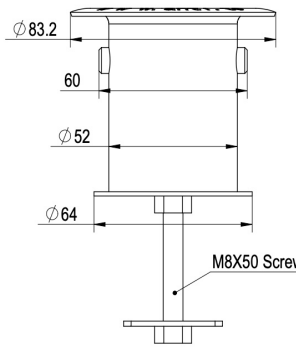

Lane Anchor SS316 (Skimmer type pool)

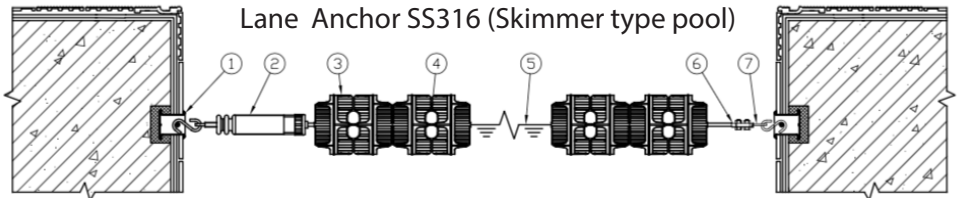

Overflow Lane Anchor

Anti Wave Overflow Lane Anchors provide secure anchoring of Lanes to the pool in overflow pools.

- SS316 Overflow Lane Anchor with 215mm Arm length. Arm is coated with durable rubberised compound.
- Longer 250mm Arm model also available.
- Secure lane attachment for overflow type (Wet deck) pool.
- Includes ChemSet Anchor for intallation to Pool.

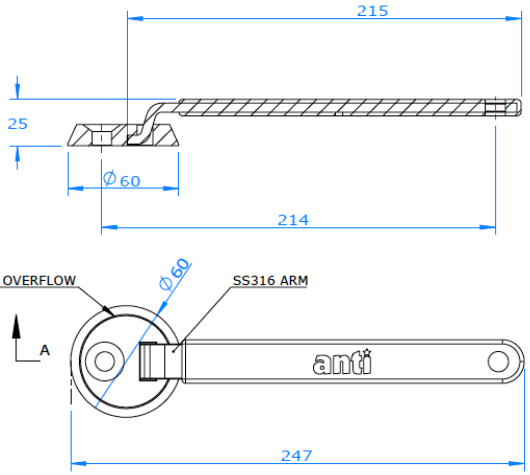

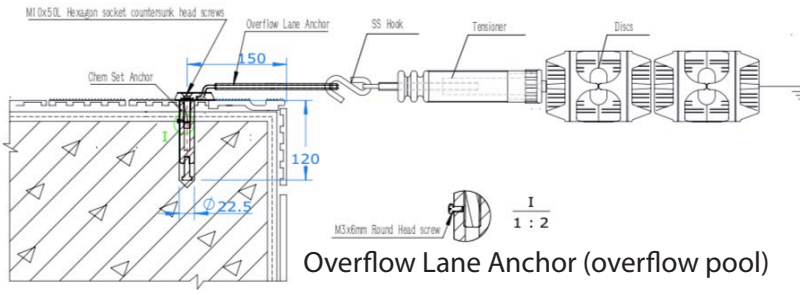

Overflow Lane Anchor (overflow pool)

CODE	PRODUCT	DESCRIPTION	WEIGHT	VOLUME
AWE030	LANE ANCHOR	SS316, 38.1mm or 48.3mm dia. x 72.2mm	0.3 kg	0.001m³
AWE031	DECK HOLE ANCHOR	SS316, 48.3mm x 125mm	0.54 kg	0.001m³
AWE121	OVERFLOW LANE ANCHOR	SS316 - 215mm arm length	0.38 kg	0.001m³
AWE121a	OVERFLOW LANE ANCHOR	SS316 - 250mm arm length	0.38 kg	0.001m³

SuperBlock 800

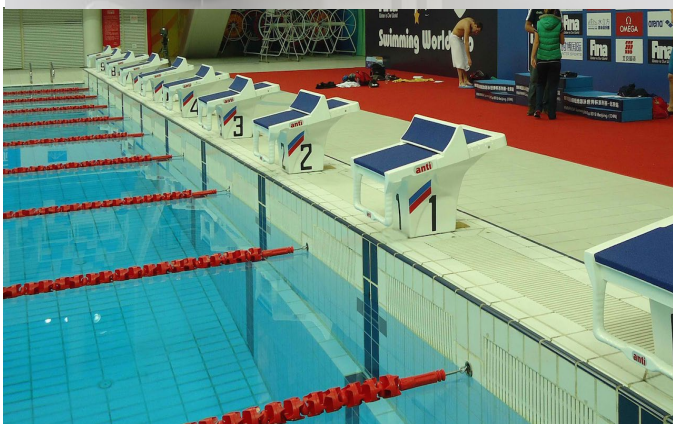

SuperBlock 800, FINA World Cup Event

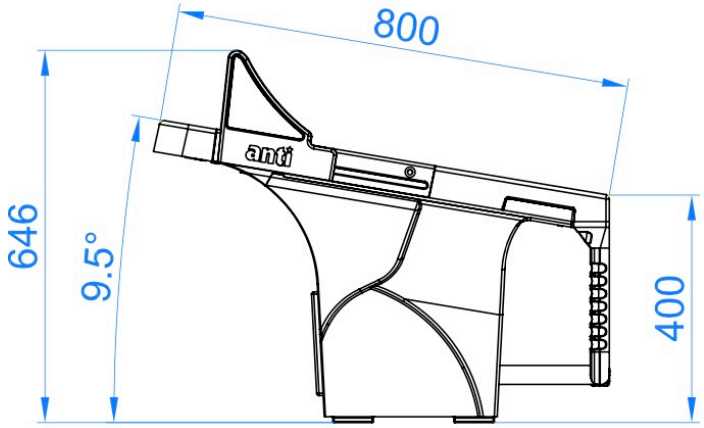

Side view

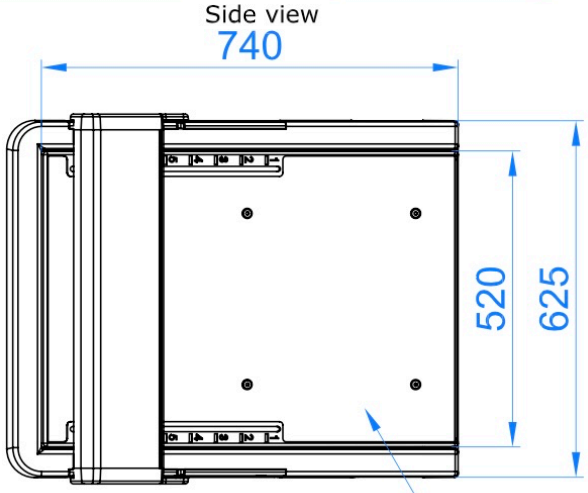

Vertical view

The Anti Wave SuperBlock 800 is our premium FINA Approved Moveable Track Start block, chosen for top performance training and competition facilities and pools around the world.

The block includes the FINA Approved Moveable Track Start System, first showcased at the 2008 Beijing Olympics Games & used at FINA World Cup, Olympic and Commonwealth Games venues.

- Fibreglass construction with SS316 fittings.
- Movable Track Start (MTS) adjustable to 5 positions, for fastest start times.
- Durable, non-slip Aquadeck ® tread on top.
- Optional Safe Start handles for fast starts and safety.
- Backstart handles reinforced with SS316 for safety and durability.
- Compatable with major electronic timing systems (including Omega RBD).

CODE	PRODUCT	DESCRIPTION	WEIGHT	VOLUME
AWE017	SUPERBLOCK 800	GRP, 800mm Top	43 kg	0.42m^3
AWE017S	SUPERBLOCK 800	SMC, 800mm	43 kg	0.42m^3
AWE018	BLOCK COVER	White Mesh	2 kg	0.05m^3
AWE019	BLOCK CONE	White GRP Cone	3 kg	0.02m^3

Block Cover

Ultimate Block Protection from UV, no diving. Page 14.

SuperBlock 750

SuperBlock 750

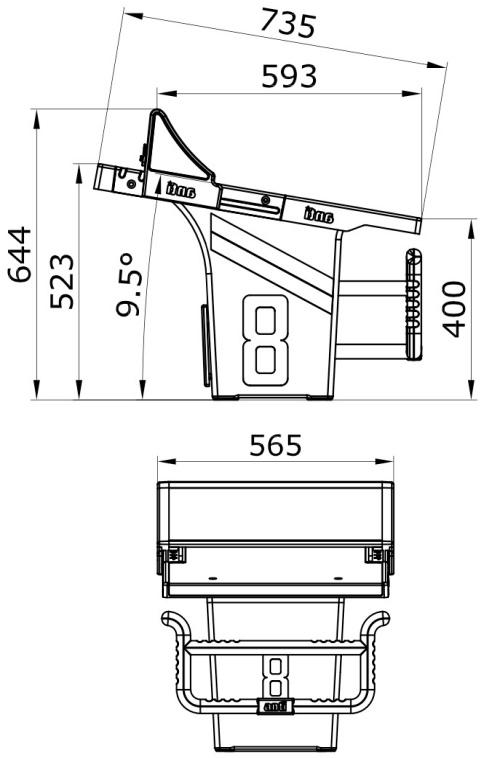

The Anti Wave SuperBlock 750 is suitable for training and competition facilities.

Includes the FINA Approved Moveable Track Start and optional Safe Start Handles.

The smaller footprint base and shorter top is more suitable for installation where deck or bulkhead space is limited.

- Fibreglass construction with SS316 fittings.
- Movable Track Start (MTS) System adjustable to 5 unique positions.
- Durable, non-slip Aquadeck ® tread.
- Safe Start handles for fast starts and safety.
- Compatable with major electronic timing systems (including Colorado Timing).

CODE	PRODUCT	DESCRIPTION	WEIGHT	VOLUME
AWE171	SuperBlock 650	GRP, 650mm top length	20kg	0.3m³
AWE71S	SuperBlock 750	SMC,750mm top length	20kg	0.3m³
AWE818	Block Cover	Heavy Duty Block Cover	2kg	0.05m³
AWE019	Block Cone GRP	No Diving	3kg	0.02m³

Anti Block 600

Anti Block 600

Anti Block 600

The Anti Block 600 is designed for the requirements of general competition and training pools.

- Fibreglass construction with 316 SS fittings.
- Compliant with FINA starting platform guidelines FR2.7.
- Fixed Track Start with ergonomic moulded non slip surface for dependable and fast start times and safety.
- Backstart handle is reinforced with SS316.
- Top features durable non-slip finish.
- Includes C-Anchors and installation inctructions.
- Optional SafeStart Handles

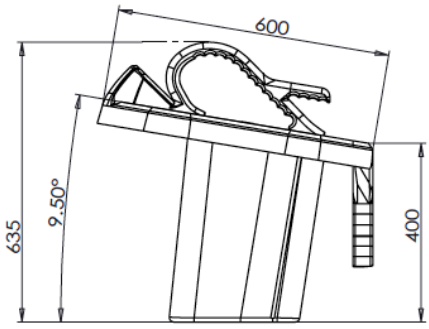

side view

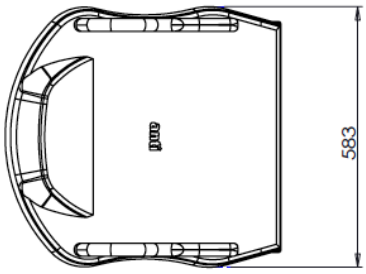

Anti Block 600, Top and Side views

CODE	PRODUCT	DESCRIPTION	WEIGHT	VOLUME
AWE115	ANTI BLOCK 600	STARTING BLOCK GRP	19.5kg	0.27m^3
AWE018	Block Cover Mesh	White Mesh Cover	2kg	0.05m^3
AWE019	Block Cover GRP	No Diving Cover	3kg	0.02m^3

Heavy Duty Block Cover

Block Cover (No Diving)

The Anti Wave Block Cover is produced from blue, heavy-duty vinyl material for ultimate Block protection, and includes in integrated drawstring rope along the bottom edge in order to secure into place. Protect your blocks from UV deterioration and prevent use during unsupervised lap swimming.
Fits all Anti Wave Starting Blocks.

Anti Wave Block Cover (no diving)

- Fits all Anti Wave Starting Blocks
- Blue Heavy-duty Vinyl Material
- Includes lower drawstring to secure in place
- 'No Diving' Clearly visible
- Protects Blocks from UV deterioration
- Designed and tested in Australia, to harsh Australian full sun summer conditions.

Alu Foldable StorBin

Protect your Anti Wave deck equipment with the original Anti Wave Foldable StorBin.

- High capacity and strong construction.
- Produced from top quality corrossion resistant powder coated aluminium.
- StorBin Folds flat for effecient pool deck storage when not in use
- Designed for pool deck stability and functionality for deck use including sturdy SS316 castor wheels.

CODE	PRODUCT	DESCRIPTION	WEIGHT	VOLUME
AWE818	BLOCK COVER	Blue HD Vinyl Block Cover 'No Diving'	1kg	0.05m^3
AWE014	FOLDABLE STORAGE BIN	Deck Storage Bin - ALU	24.5kg	0.20m^3
AWE010S	SPARE PARTS	ALL SPARE PARTS AVAILABLE	-	-

BackStroke Start Ledge

Backstroke Start Ledge (LBH)

The Anti Wave Backstroke Start Ledge is an easy to use and practical backstroke starting device for swimmers to perform top performance backstroke starts. The Backstroke Start Ledge includes manual height adjustment and is suitable for connection to all standard starting blocks including all Anti Wave Blocks. Developed in consultation with Australian Swim Team members, the Ledge is simple to install and adjust on the pool by the swimmer or coach.

Key Features: (direct online ordering www.anti-wave.com)

- Compatable with all standard block types, and adjustable to suit a range of swimmers needs including Masters as well as top competition swimming and training.
- Marine grade anodised aluminium body with non-slip custom moulded surface, Croc Grip tape on upper edge, Marine Nylon Protector End Caps and Marine Polyester Web bing with SS316 Cam Buckle.
- Adjustable to suit each swimmers needs using simple and durable Marine StayPut and Eyelet system. Can be adjusted to +4cm above or -4cm below water level, as well as longer adjustments to suit Master/Youth swimmers.
- Easily adjustable on the pool by the swimmer while in the water, or by the coach from the Pool deck.
- Meets FINA FR 2.10 Regulations, suitable for FINA Events.
- Dimensions are 650mm Long, 80mm Height, 20mm Width. Angle of wedge is 10 degrees.

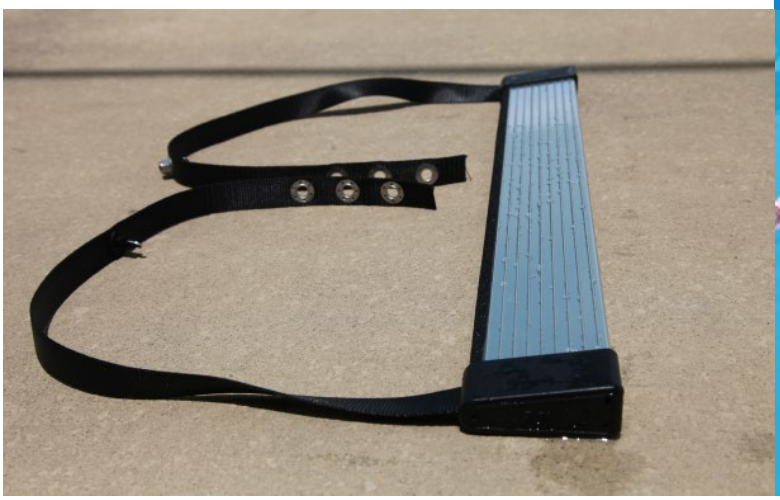

CODE	PRODUCT	DESCRIPTION	WEIGHT	VOLUME
AWE350	Backstroke Start Ledge LBH	BackStroke Start Device	2.1kg	0.05m^3
AWELBHS	ALL SPARE PARTS AVAILABLE	PLEASE ENQUIRE	-	-

BackStroke Start Ledge

Anti Wave Backstroke Start Ledge - Velcro Model (LTSV)

The Patented Anti Wave BackStroke Start Ledge provides a simple and easy to use Ledge for swimmers to perform highest performance backstroke starts in both training and competition. Designed for Track Start type blocks.

Designed in close collaboration with the Australian backStroke swim team and top level Australian coaches, the ledge is simple to install and adjust by the swimmer or coach while in the pool or on the pool deck. The Ledge locks securely into place once set, and is quickly removed from the Block when used in competition or training.

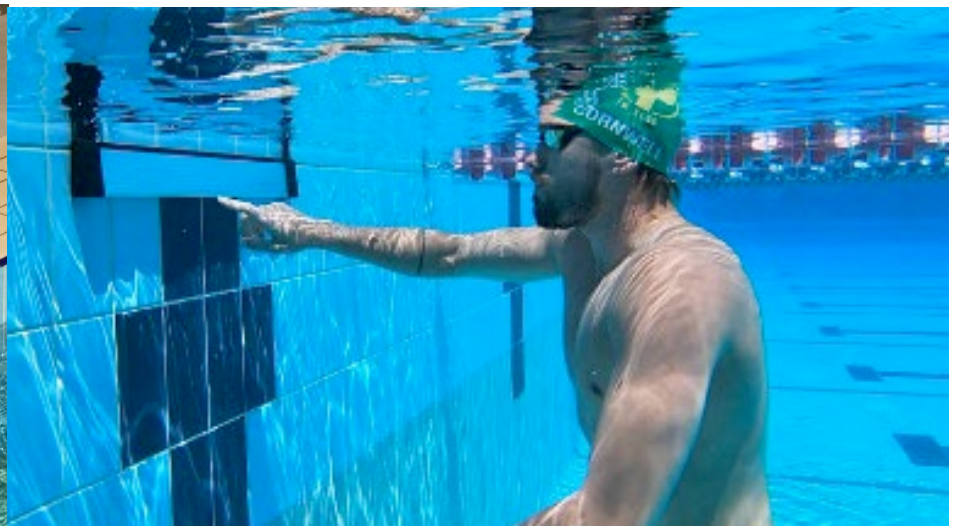

Specifications: (direct online ordering www.anti-wave.com)

- Marine grade anodised aluminium body with non-slip custom moulded surface, CrocGrip non-slip tape on upper edge, for ergonomic and durable foot rest. Marine Nylon Protector End Caps protect pool tiles from damage.
- The ledge attaches securely to the side of the Block TrackStart Wedge via durable 3m Vellcro attachments.
- The height of the Ledge can be adjusted by the swimmer while in the pool, or the coach on pool deck. The ledge is raised or lowered into needed position by adjustment of the position of the Track Start Wedge on the block.
- For competition meets the Ledge may be fixed at a uniform fixed position at water level, as used at FINA WCH Event 2019.
- Heavy Duty nylon straps are rated to withstand even the strongest of swimmers' starts. Load rated to 13kN. Body is made from Anodised Marine Grade Aluminium, custom Non-Slip body with Croc Grip tape on upper surface.
- Meets FINA FR 2.10 Regulations, suitable for FINA Events.
- Includes custom Anti-slip trasction surface which is secure and also gentle on the feet. Croc-Grip non slip tape is installed on the crucial upper edge, where most pressure is applied when using correct start techniques.
- Simple, trouble free manual movement ensures no moving parts to break, and reliable installation, adjustment and removal each and every time.
- During competition, the Ledge is quickly and easily removed from the Block once race has begun.

CODE	PRODUCT	DESCRIPTION	WEIGHT	VOLUME
AWE351	Backstroke Start Ledge LTSV	BackStroke Start Device	2.1kg	0.05m^3
AWELTSS	ALL SPARE PARTS AVAILABLE	PLEASE ENQUIRE	-	-

Blockstand & TurnBoards

Anti Block 600 w/ OverFlow BlockStand & GRP TurnBoard 2.0m x 0.3m

Overflow Block Stand w/ Anti Block 600

Overflow BlockStand

The Overflow BlockStand provides a stable and durable platform for the installation of Anti Wave blocks in an overflow pool environment.

- Suitable for Overflow type pools.
- Produced from hand-laid FRP and SS316L fittings.
- Elegant design allows cleaning of pool deck without removal of OverFlow BlockStand.
- TurnBoard GRP (sold seperately) attaches to the Overflow BlockStand.
- 4 piece Dynasets/Anchors are included for installation to the pool deck.

TurnBoard GRP

Produced from FRP with SS316L fittings, the Turnboard provides positive confirmation of the pool end for the swimmer and attaches to the Overflow BlockStand with 4 x M4 Bolts.

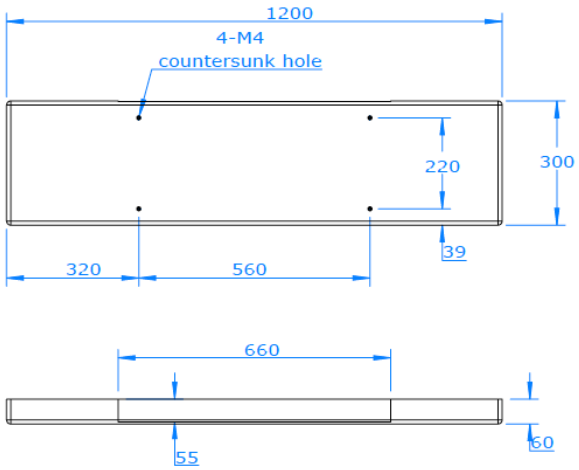

CODE	PRODUCT	DESCRIPTION	WEIGHT	VOLUME
AWE020	OVERFLOW BSTAND	GRP BLOCKSTAND	31kg	0.45m^3
AWE021	TURNBOARD GRP	GRP 1.2m x 0.3m	10kg	0.10m^3
AWE429	TURNBOARD GRP	GRP 2.0m x 0.3m	13kg	0.15m^3

Pool Deck Equipment

Back Stroke Pole and Flag Set

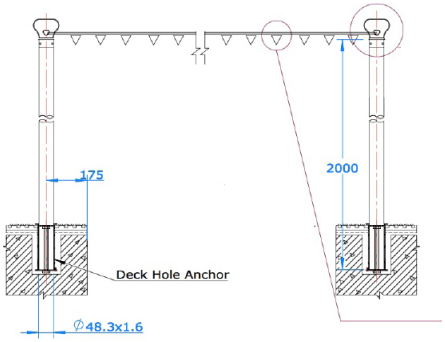

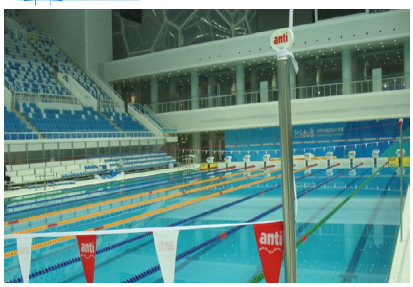

Beijing Olympics 2008 Water Cube

The Anti Wave Back Stroke Pole and Flag Set contains a complete set of FINA Regulation SS Poles, Flags and Ropes and Deck Hole Anchors.

Includes:

- 2 x SS316 BackStroke Poles FINA Regulation Height 2m
- 1 x BackStroke Flags and Rope FINA Regulation
- 2 x Deck Hole Anchors for fixing of Poles

- Three sizes available - to suit 21m, 25m and 50m Pools.

- Custom Flag printing available to suit your pool or club with adequate notice.

False Start Poles and Rope Set

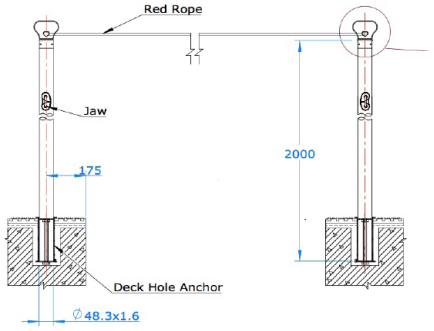

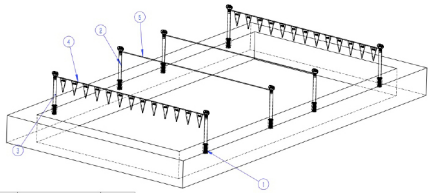

1. Backstroke Poles and Flags Set - Deck Hole Anchor
2. False Start Poles and Rope Set - SS 2m Pole
3. Backstroke Poles and Flags Set - SS 2m Pole
4. Backstroke Poles and Flags Set - Flags and Rope
5. False Start Poles and Rope Set - False Start Rope

The Anti Wave False Start Poles and Rope Set contains a complete set of FINA Regulation SS Poles, False Start Rope, and pool deck fittings.

The False Start Poles and Rope Set features a quick release cam on the poles to allow rapid false start indication to swimmers.

Includes:
- 2 x SS316 False Start Poles FINA Regulation Height 2m
- 1 x False Start Rope and Fittings
- 2 x Deck Hole Anchors

- Three sizes available - to suit 21m, 25m and 50m pools. Customs sizes also available.

- False Start Poles and Rope Set meets all FINA Requirements.

CODE	PRODUCT	DESCRIPTION	WEIGHT	VOLUME
AWE039	FALSE START POLES ROPE SET	SS316 Poles w/ Jaw x 2 , DH Anchor x 2, Rope	30kg	0.40m^3
AWE032	BACKSTROKE POLES AND FLAG SET	SS316 Poles no Jaw x 2, DH Anchor x 2, Flags	54kg	0.65m^3
AWE012	LIFEGUARD CHAIR	ALU LifeGuard Chair - 4 Step	51kg	1.24m^3

Pool Deck Equipment

Anti Wave Lifeguard Chair

The Anti Wave Lifeguardchair provides a practical and safe vantage point for life guard duties.

Specifications:

- Sturdy HD Aluminium construction with white powder coating.
- Nylon wheels allows the chair to be safely moved.
- Rubber inserts protect the pool deck from scratches and ensure stable and safe positioning.
- Lifeguard chair has fittings for the mounting of a lifegoard Bouy and Umbrella, both located just behind the seat.

Anti Wave Lifeguard Chair

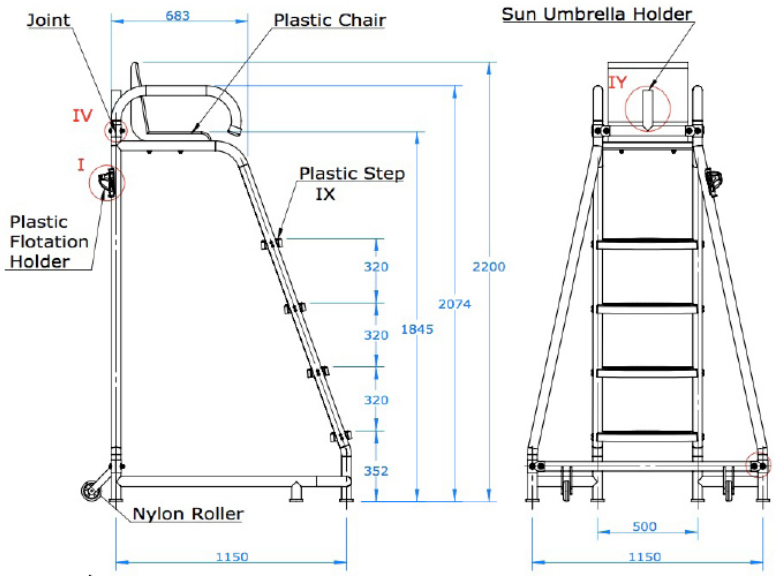

Key Dimensions:

- Height from ground to base of seat is 1895mm.
- Base dimensions are 1200mm x 1200mm.
- Total height to top of chair is 2000mm.

CODE	PRODUCT	DESCRIPTION	WEIGHT	VOLUME
AWE039	FALSE START POLES ROPE SET	SS316 Poles w/ Jaw x 2 , DH Anchor x 2, Rope	30kg	0.40m^3
AWE032	BACKSTROKE POLES AND FLAG SET	SS316 Poles no Jaw x 2, DH Anchor x 2, Flags	54kg	0.65m^3
AWE012	LIFEGUARD CHAIR	ALU LifeGuard Chair - 4 Step	51kg	1.24m^3

Anti Wave StoReels

Anti Wave StoReel & StoReel Cover

Protect your Anti Wave racing lanes with the original Anti Wave StoReel.

High capacity, unbeatable quality and durability:

- HD Powder Coated Aluminium.
- Exceptional Capacity - holds up to 6 x 25m MIDI 110mm lanes or 4 x 25m MAXI 150mm.
- Available with green Solarguard covers which protect from intereference, dust and UV radiation.
- Strong SS316 Castor Wheel Body with Marine Nylon Castor Wheels with foot activated brake.
- All replacement parts available.

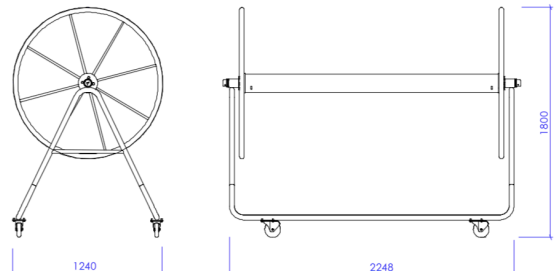

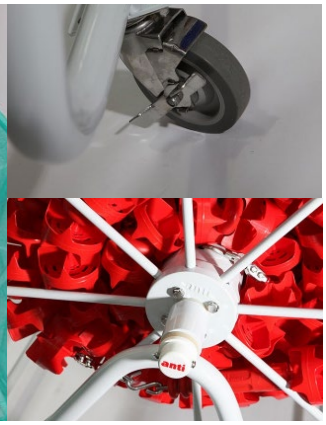

Anti Wave StoReel, above StoReel with Lanes, right SolarGuard Cover.

Above; heavy duty braked wheels

CODE	PRODUCT	DESCRIPTION	WEIGHT	VOLUME
AWE010	STOREEL	ALU Lane Storage Reel	48kg	0.47m^3
AWE014	FOLDABLE STORAGE BIN	Deck Storage Bin - ALU	24.5kg	0.20m^3
AWE011	STOREEL COVER	SolarGuard Cover Green	2.5kg	0.03m^3
AWE010S	SPARE PARTS	ALL SPARE PARTS AVAILABLE	-	-

TransGrate PP Overflow Gratings

Grating Colours (special colours available on request):

White
Similar to RAL 9010

Grey
Similar to RAL 7032

Blue

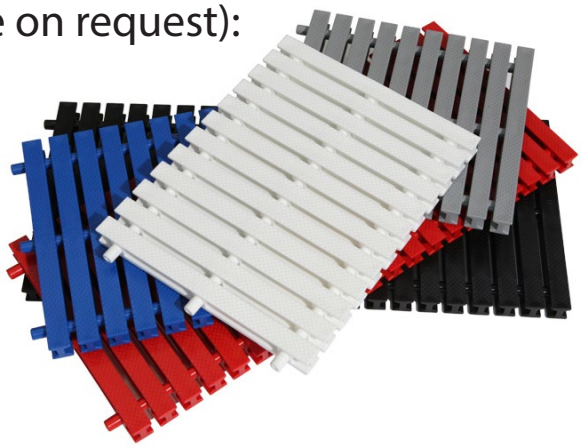

TransGrate PP Profiles:

Anti Wave TransGrate PP Gratings profile include our safety profile seal, which is incorporated into the unique I-Beam interlocking design. This structure enables maximum strength and durability on the pool deck, while maintaining very high levels of comfort under the feet. TransGrate PP is suitable for straight line or curves with raduis up to 3950mm.

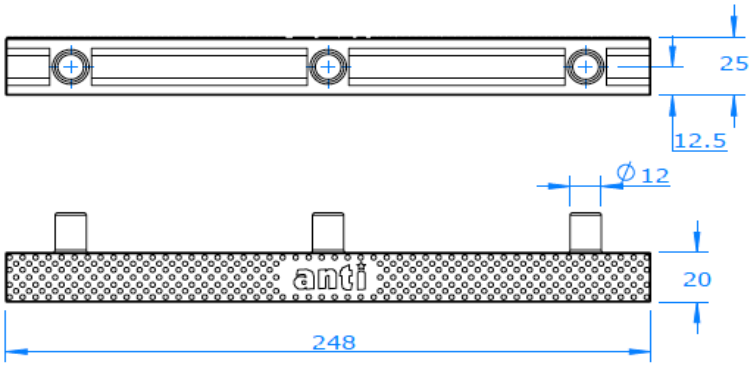

TransGrate Features:

- Produced from engineering plastics (PP) for superior strength and durability. Materials used are safe and non-toxic and ensure precise tolerances, consistent colour, thickness and density are maintained.
- Unique I-Beam profile ensures maximum strength and durability, as well as provides a highly comfort able, non-slip top surface for maximum safety and comfort on the pool deck.
- Unique I-Beam profile design is gentle on the feet and Antislip top is highly slip resistant. Slip resistance is equivalent to DIN 51097 testing criteria, Catagory B.
- UV stabilised materials are highly durable and offer excellent safety and hygienic qualities. Highest quality colours are used to ensure longevity and that gratings compliment the general pool layout.
- TransGrate PP suitable for straight line or curved applications with radius up to 3950mm.

Anti Wave TransGrate PP

Features Summary:

- Easy to use, maintain and clean
- Excellent technical, safety and hygiene features
- Highest specification materials, precise tolerances and production specs.
- Suits straight line and also curves with radius to 3950mm.
- Corners available - please enquire.

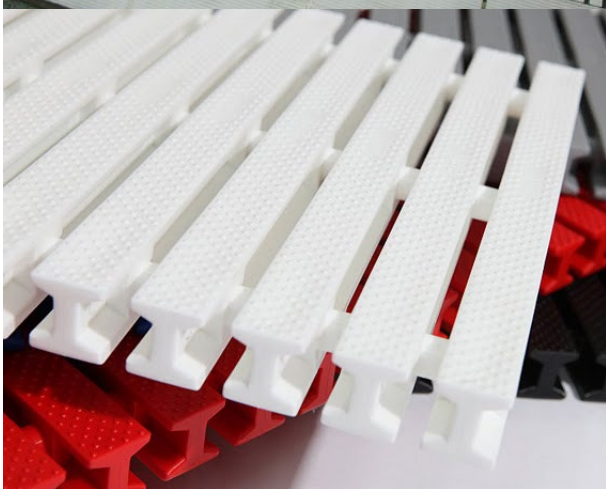

Anti Wave TransGrate (above).

Available Sizes:

- Available in 250mm, 300mm, and 350mm width.
- Custom widths are also available - please enquire.
- Corner options available - please enquire.

Suitable For:

- Indoor and outdoor aquatic facilities
- Swimming competition facilities
- Hotel Pools and Spas
- Whirlpools and similar facilities with overflow channels

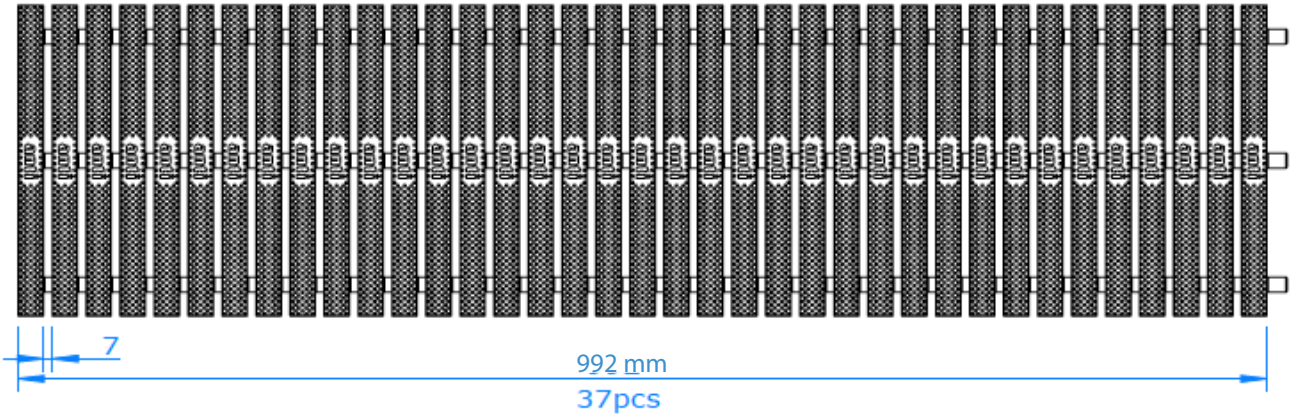

CODE	PRODUCT	DESCRIPTION	WEIGHT	VOLUME
AWE026	TRANSGRATE PP (/m)	250mm Width Grating	3 kg	0.01m³
AWE027	TRANSGRATE PP	300mm Width Grating	4.7kg	0.01m³
AWE028	TRANSGRATE PP	350mm Width Grating	5.5kg	0.01m³
AWE062	LONGIGRATE PP (/m)	LongiGrate Grating	Please enquire	Please enquire
AWE026a	TRANSGRATE CORNER	90 Degree Corner	Please enquire	Please enquire

Anti Wave LongiGrate PP

Features Summary:

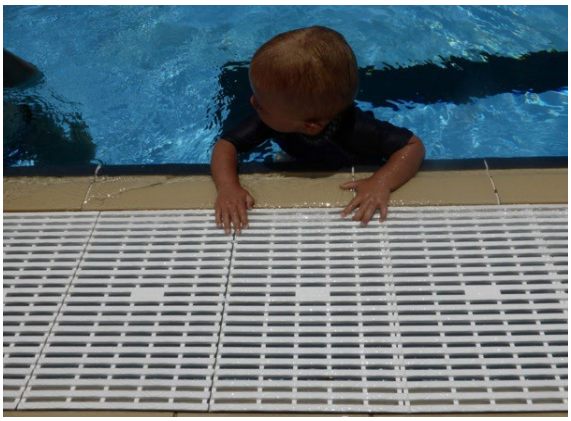

- LongiGrate features rigid interlocking Gratings, suitable for straight line applications where structural rigity is required.
- Excellent technical, safety and hygiene features.
- Highest specification materials, stronger structurally than TransGrate.
- Precise tolerances and production specifications.

Available Sizes:

- Available in 250mm, 300mm, 350mm, and 400mm and 450mm width.
- Corner options available - please enquire.

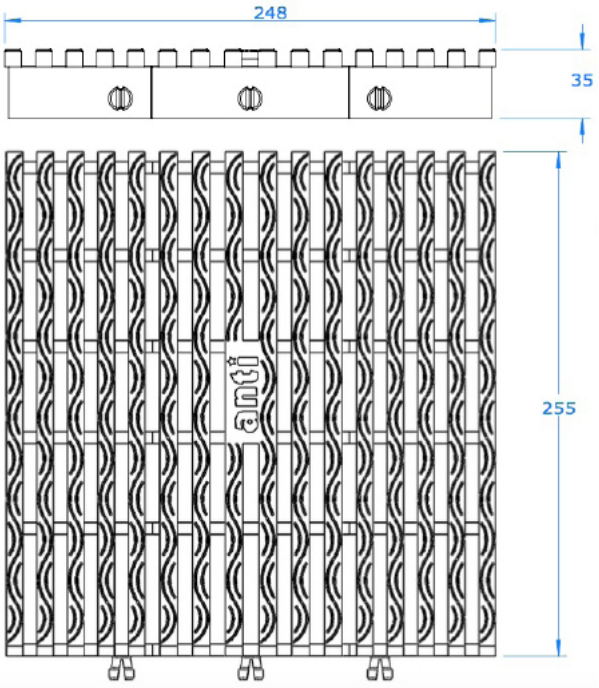

Suitable For:

- Indoor and outdoor aquatic facilities with overflow channels.
- Swimming competition facilities and peripheral facilities.
- Hotel Pools, Spas and similar facilities.
- Applications where load bearing strengths is required.

Anti Wave LongiGrate (above & left)

CODE	PRODUCT	DESCRIPTION	WEIGHT	VOLUME
AWE026c	LONGIGRATE PP 250mm (/m)	LongiGrate Grating	Please enquire	Please enquire
AWE027c	LONGIGRATE PP 300mm (/m)	LongiGrate Grating	Please enquire	Please enquire
AWE028c	LONGIGRATE PP 350mm (/m)	LongiGrate Grating	Please enquire	Please enquire
AWE029c	LONGIGRATE PP 400mm (/m)	LongiGrate Grating	Please enquire	Please enquire

Caddy Lane Saver

Anti Wave Caddy Lane Saver

Anti Wave Lane Caddy, The Valley Pool, Brisbane, Australia

The Original Lane Caddy.

The Anti Wave Caddy Lane Saver provides for safe and quick removal and installation of Antiwave swimming racing lanes.

The Caddy Lane Saver is designed to be quickly installed onto the pool deck and allows for smooth and unhindered movement of lanes that would otherwise be damaged by the sharp pool edge.

- The lane Caddy System is an Anti Wave original design.
- Hooks over the pool edge to enable easy and safe removal of lanes.
- Produced from reinforced FRP.

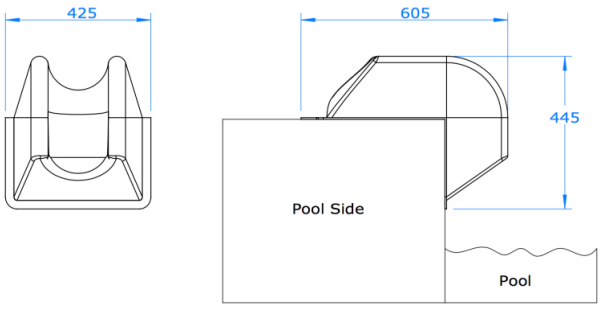

Anti Wave Lane Caddy

CODE	PRODUCT	DESCRIPTION	WEIGHT	VOLUME
AWE013	LANE CADDY	GRP LANE REMOVAL	3.25 kg	0.07m^3

Global Anti Goal

DURABILITY ✓ INNOVATIVE DESIGN ✓ LIGHT WEIGHT ✓

The Global Anti Goal blends cutting edge materials and production with innovative design, resulting in a light weight, heavy duty, compact, full sized Polo Goal that meets the needs of all Clubs and Facilities around the world.

Each component and fitting has been carefully selected and tested for maximum durability and longevity, even under the most severe player and environmental conditions.

Official Polo Goal of USA Water Polo

Left : Compact storage, Bottom Left & Right: Excellent stability

AWE392 1.2m Global Anti Goal

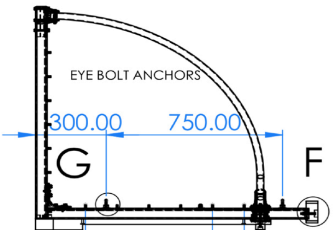

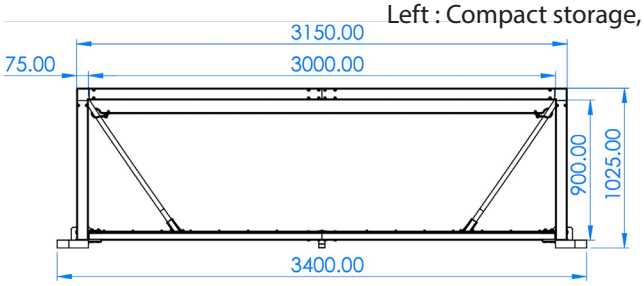

AWE392 Global Anti Goal 1.2m (above)

AWE394 1.4m Global Anti Goal (FINA Compliant)

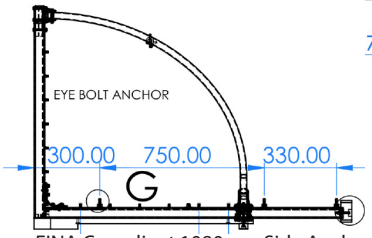

FINA Compliant 1080mm Side Anchors

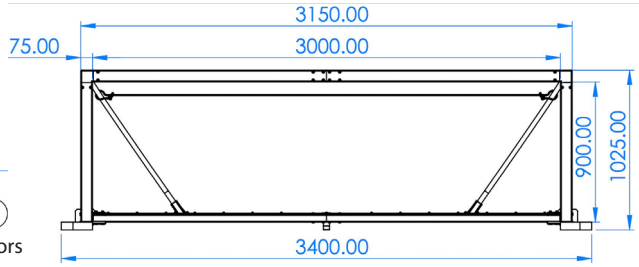

AWE394 Global Anti Goal 1.4m (above)

Product Specifications:

- Fabricated from custom marine grade powder coated Aluminium with HD Marine Nylon & SS316 fittings.
- Easily foldable for compact and safe poolside storage.
- Includes Long-Life HD polypropylene cord net.
- Marine Nylon Net Clips ensure simple and secure Net Installation.
- Soft Durable Pool Edge bumpers on rear of frame prevent damage to expensive pool edge and tiles.
- Durable oversized HD PE Flotation elements ensure stability during use, foam elements rest on the pool concourse, preventing damage to pool edge and tiles.
- Open corner net configuration reduces ball rebound.
- PVC Bows allow quick disconnect of lower rear frame to goal top frame for compact folding and low profile storage.
- Durable, light weight, heavy duty design and construction allowing safe and easy 1 or 2 person pool deck movement.

Available in 1.2m and 1.4m side depth configurations.
Both 1.2m and 1.4m models have 3m x 0.9m Goal Face.

Total weight is AWE392 26kg/ AWE394 28kg. Compact light weight Shipping dimensions for efficient Freight options.

Comprehensive list of spare parts available.
All parts designed and produced in Australia.

CODE	PRODUCT	DESCRIPTION	WEIGHT	VOLUME	PRICE
AWE392	GLOBAL ANTI GOAL 1.2m Depth	Competition Polo Goal, 1.2m, Goal Depth	27 kg	0.30m³	Please enquire
AWE394	GLOBAL ANTI GOAL 1.4m Depth	Competition Polo Goal, 1.4m Goal Depth	29 kg	0.30m³	Please enquire
AWE390	GLOBAL ANTI GOAL JNR/BEACH	JNR/FINA BEACH POLO 2.5m x 0.8m	26kg	0.30m³	Please enquire
AWE593	BLACK HD REPLACEMENT NET	Suit Global Anti Goal AWE394/394	1.5kg	0.03m³	Please enquire
AWE000	ALL SPARE PARTS AVAILABLE	PLEASE ENQUIRE	-	-	

JNR/BEACH POLO Global

JNR/BEACH Global Anti Goal 2.5m x 0.8m

The 2021 release of the 'Global Anti Goal' represents the culmination of 50 years of experience in Goal innovation, design and production.

The JNR Model Goal is designed and produced in Australia to the highest specifications.

Compliant with all current FINA JNR and FINA BEACH POLO Competition regulations.

The Global Anti Goal blends cutting edge materials and production with innovative design, resulting in a durable, full sized Polo Goal, perfectly suited to all Clubs and Polo facilities.

DURABILITY ✓ INNOVATIVE DESIGN ✓ LIGHT WEIGHT ✓

AWE390 JNR/BEACH Global Anti Goal:
(Inner Front Frame Dims)

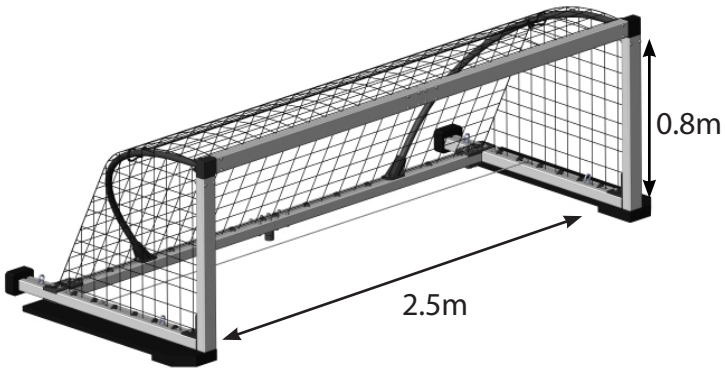

AWE390 JNR/BEACH POLO Global Anti Goal shown above

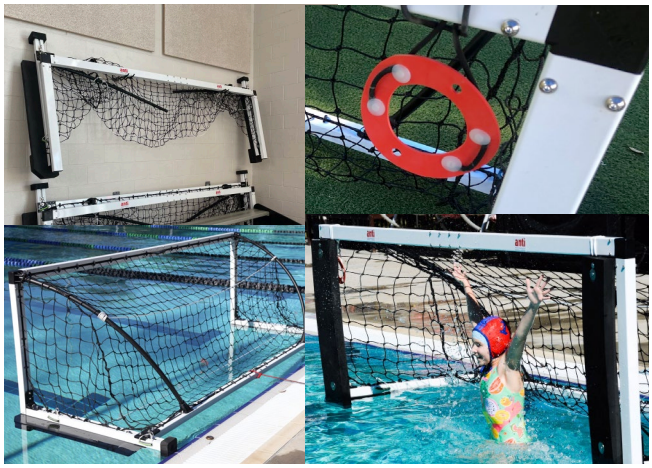

Top Left: AWE392 1.2m Folded, Bottom Left: AWE392 1.2m
Bottom Right: JNR Conversion Kit, Top Right: Goal Training Targets

Product Specifications:

- Fabricated from custom marine grade powder coated Aluminium with HD Marine Nylon & SS316 fittings.
- Easily foldable for compact and safe poolside storage.
- Includes Long-Life HD polypropylene cord net.
- Marine Nylon Net Clips ensure simple and secure Net Installation.
- Soft Durable Pool Edge bumpers on rear of frame prevent damage to expensive pool edge and tiles.
- Durable oversized HD PE Flotation elements ensure stability during use, foam elements rest on the pool concourse, preventing damage to pool edge and tiles.
- Open corner net configuration reduces ball rebound.
- PVC Bows allow quick disconnect of lower rear frame to goal top frame for compact folding and low profile storage.
- Durable, light weight, heavy duty design and construction allowing safe and easy 1 or 2 person pool deck movement.

JNR Model has 2.5m x 0.8m Front Goal Face dimensions.

Total weight is AWE390 is 20kg. Compact light weight Shipping dimensions for efficient Freight options.

Comprehensive list of spare parts available.
All parts designed and produced in Australia.

MADE IN AUSTRALIA

Customer Testimonial:

Concerning our new Anti Global Goals, we LOVE that the Goals are Light and durable, well constructed, quality product. The Rear Cross frame cable holds many balls for easy access during training, the cage floats perfectly with highest quality foam floats, the goal folds easily for storage and looks great. Warm Regards, George Stransky, Alaska.

Prof. Dr. George Stransky, Anchorage, Alaska, 20 June 2021
- 1964 Tokyo Olympics Goalie for USA
- FINA Masters 70+ Gold Montreal 2014

Customer Testimonial:

Got to say we love our new goals!!! I think this picture says it all. Easy for one person to handle. They float perfectly and fold up when we are done. Amazing! Thanks Anti & Anton. This is a great product.

John Hildebrand
Coach - Colorado Mesa University
USA

Anti Pro Goal 1080

Official Polo Goal of USA Water Polo

The FINA approved Anti Pro Goal 1080 is the flag-ship Goal model, suitable for FINA or equivalent level Polo competition events. FINA Compliant.

The Anti Goal 1080 represents the highest quality Goal available today, with a range of innovative features and durable non-corrosive design.

Includes our FRP Floats with closed cell foam elements, Anti-Net clips for easy net installation. Goal features high visibility tough carry handles, and HD SS316 anchor points.

Selected for 2018 FINA Inter-Continental World League Auckland Venue & Commonwealth Games 2018 Polo Venue, and 2018 Gold Coast Commonwealth Games, Australia. Official Polo Goal of USA Water Polo.

Specifications:

- Fabricated from custom marine grade powder coated aluminium extrusions and hand-laid fibreglass for durability.
- All fittings are SS316. Bows connecting Frame to Floats are produced from powder coated marine grade aluminium.
- Long-Life HD polypropylene cord net, knotted at every intersection, ensures long service under hard use. Easy to install Nylon Net Clips connect Net to Frame.
- Durable EVA closed cell foam floatation elements.
- Includes Lane Anchor attachment points at the 750mm and 1080mm distances for both pre and post 2015 FINA regulations.
- Light weight design enables easy 2 person pool deck movement.
- Pool Edge bumpers on rear of Goal Float prevent chipping of pool tiles and guttering when installing and removing from pool.
- Foam GRP protector-slides. Open corner net configuration to reduce ball rebound.
- Custom aluminium front frame cross section for maximum strength and lightest weight.
- Thick external carry handles assist with safe and easy pool deck transportation.

AWE331 Anti Pro Goal FINA 1080 (above and right)

Official Polo Goal of USA Water Polo (above)

CODE	PRODUCT	DESCRIPTION	WEIGHT	VOLUME
AWE331	ANTI PRO GOAL FINA 1080	Competition Polo Goal FINA	46 kg	0.68m^3
AWE899	BLACK HD REPLACEMENT NET	Suit Anti Pro Goal 1080	3kg	0.03m^3
AWE000	ALL SPARE PARTS AVAILABLE	PLEASE ENQUIRE	-	-

Anti Pro Goal 750

Anti Pro Goal 750

The Anti Goal sets the standard for international Water Polo competetion equipment. Suitable for Pre-2015 FINA compliant facilities, with distance of 750mm between goal side anchors.

Includes our HD Net and Goal is fabricated from custom marine grade powder coated aluminium extructions and hand laid fibreglass Floats with closed cell floatation units.

Open Net configuration reduces Ball Rebound during play and powder coated aluminium construction ensures safe movement of the goal on the pool deck by two people.

Official Polo Goal of USA Water Polo

Specifications:

- Fabricated from custom marine grade powder coated alu minium extrusions and hand-laid fibreglass for durability.
- All fittings are SS316. Bows connecting Frame to Floats are produced from powder coated marine grade aluminium.
- Long-Life HD polypropylene cord net, knotted at every intersection, ensures long service under hard use. Anti-Net Clip connects Net to Frame easily.
- Durable EVA closed cell foam floatation elements.
- Thick external carry handles assist with safe and easy pool deck transportation.
- Light weight design enables safe 2 person pool deck movement.
- Pool Edge bumpers on rear of Goal Float prevent chipping of pool tiles and guttering when installing and removing goal.
- Foam GRP protector-slides. Open corner net configuration to reduce ball rebound.
- Custom aluminium front frame cross section for maximum strength and lightest weight.
- Official Polo Goal of USA Water Polo.

AWE332 Anti Pro Goal 750 (In Pool)

AWE332 Anti Pro Goal 750

CODE	PRODUCT	DESCRIPTION	WEIGHT	VOLUME
AWE332	ANTI PRO GOAL 750	Competition Polo Goal 750 Spec	45 kg	0.55m^3
AWE899	BLACK HD REPLACEMENT NET	Suit Anti Pro Goal 750	3kg	0.03m^3
AWE000	ALL SPARE PARTS AVAILABLE	PLEASE ENQUIRE	-	-

Senior Folding Goal

Senior Folding Goal 750 & 1080

The Senior Folding Goal is a full-sized competition Polo goal, dimensionally the same as the Anti Pro Goal 750 with the added benefit that it folds flat for storage. Available in traditional 750mm, or post 2015 FINA regulation 1080mm models, which has 1080mm distance between Goal Line Anchor Points.

The Senior Goal is a favourite for Clubs and Training Facilities around the world. Its foldable design allows for the Goal to be stored safely with minimal storage room required.
Official Goal of USA Water Polo.

Specifications:

- Fabricated from custom marine grade powder coated aluminium extrusions and hand-laid fibreglass for durability.
- All fittings are SS316. Bows connecting Frame to Floats are produced from powder coated marine grade aluminium.
- Net is Heavy Duty, polypropylene cord, knotted at every intersection. Anti-Net Clip connects Net to Frame securely.
- Durable EVA closed cell foam floatation elements.
- Light weight design enables easy 2 person pool deck movement.
- Pool Edge bumpers on rear of Goal Float prevent damage to pool tiles and guttering when installing and removing goal.
- Foam GRP protector-slides. Open corner net configuration to reduce ball rebound during game play.
- Custom aluminium front frame cross section for maximum strength and lightest weight.
- Thick high vis external carry handles assist with safe and easy pool deck transportation.

Please contact us to order or for further details.

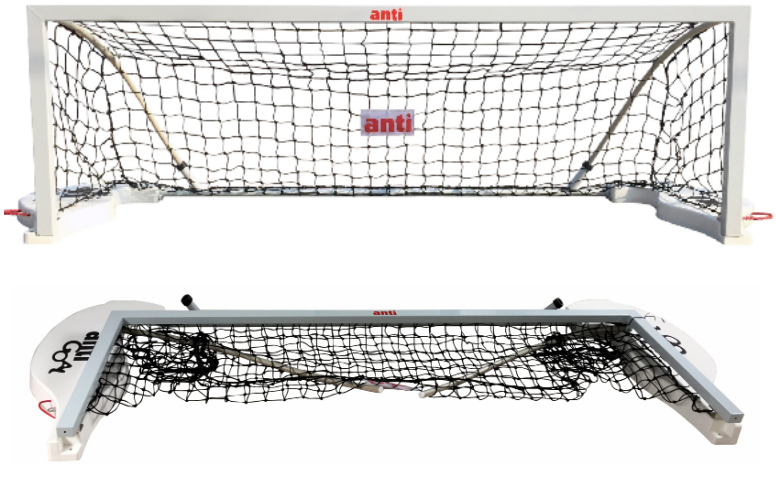

AWE330 Senior Folding Goal 1080 (above) and (below) Senior Folding Goal 1080 - simple folding for convenient storage.

AWE330 Senior Folding Goal 1080 (above) and (below) Senior SS316 Hinge (below). Simple folding for convenient storage.

CODE	PRODUCT	DESCRIPTION	WEIGHT	VOLUME
AWE330	SENIOR FOLDING GOAL 750	Senior Folding Goal 750 with Black et	45 kg	0.55m^3
AWE334	SENIOR FOLDING GOAL 1080	Senior Folding Goal 1080 with Black Net	46 kg	0.55m^3
AWE899	BLACK HD REPLACEMENT NET	Suit Senior Goal 750 & Anti Pro 1080.	3kg	0.03m^3
AWE330b	SENIOR GOAL FINA ADAPTOR	Includes 2 x Bars and Fittings	4.5kg	0.039m^3
AWE000	ALL SPARE PARTS AVAILABLE	PLEASE ENQUIRE	-	-

Water Polo Equipment

Flippa/Junior Folding Goal

The Folding Goal is also available in a junior Flippa version which is two-thirds the size of the Senior and produced specifically for the new and exciting 'Flippa' Polo.

- Produced to Anti Wave's high standards with stable flotation panels and durable hand-laid fibre glass.
- Ideal for kids' games, or any location where a full-size competition goal is not needed.

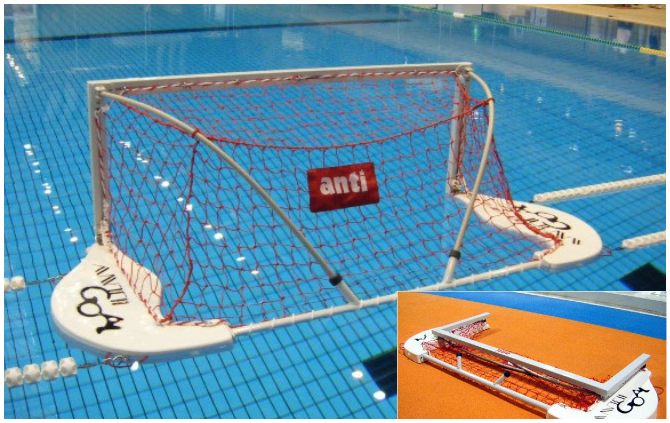

Flippa/Junior Folding Goal • Upright & Folded

Anti Wall Goal

The Anti Wave Universal Wall Goal is designed to fit one the pool edge or on a moveble bulkhead. Durable canvas protects pool edge blocks from ball impact.

The Wall Goals is installed via deck hole anchors, for easy removal. Short and Tall models available.

Full Competition Polo Field, FINA Competition

Polo Field Lines

Anti Wave Polo Field lines have been used around the word from local club matches to top level FINA World Cup and Olympic competitions.

- Available in MIDI 110mm Anti Wave Lanes or MAXI 150mm Lanes.

- Complete Water Polo field of play as per current FINA Regulations.

- Official Polo Field of USA Water Polo 2021

Polo Field Lines, MIDI MENS POLO FIELD

CODE	PRODUCT	DESCRIPTION	WEIGHT	VOLUME
AWE329	JUNIOR FOLDING GOAL	Junior Folding Goal with Net	33 kg	0.35m^3
AWE898	REPLACEMENT NET RED	To suit JNR Folding Goal	2kg	0.03m^3
AWE328	ANTI WALL GOAL	With Net and Canvas	50 kg	0.57m^3
AWE323M/W	POLO FIELD LINES COMPLETE	MIDI 188m MENS/WOMENS	175kg	3.0m^3
AWE322M/W	POLO FIELD LINES COMPLETE	MAXI 188m MENS/WOMENS	300kg	4.7m^3
AWE000	ALL SPARE PARTS AVAILABLE	PLEASE ENQUIRE	-	-

Global Inflatable Goals

Anti Wave is pleased to announce the release of the New Global Inflatable Goal Range.

The Global Inflatable Goal Range blends high quality, durable materials and components with a compact and easy to transport design. A durable and affordable inflatable option for polo clubs and pools for both training and competition. Models include SENIOR Polo, BEACH Polo, and JUNIOR Polo sizes; catering for Adult clubs as well as the very popular international FINA Beach Polo & also Jnr Habawaba Youth Polo competition formats. The goals include a tough PVC Carry Bag and High Volume Foot Pump for quick inflation.

- SNR Inflatable Goal 3.00m L x 0.9m W x 1.2m D (Full Size Comp Goal)
- BEACH POLO Inflatable Goal 2.50m L x 0.8m W x 1.1m D (FINA Beach Polo size)
- JNR Inflatable Goal 2.15m L x 0.75m W x 1.0m D (Habawaba Youth size)

Above: JNR Inflatable Model 2.15m x 0.75m x 1.0m
Below: SNR Mens (FINA) Model 2.0m x 0.9m x 1.2m

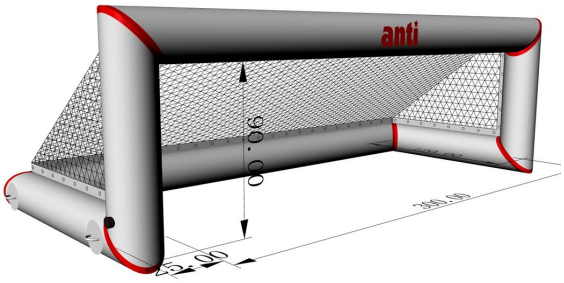

Above: JNR Polo Model 2.15m x 0.75m x 1.0m

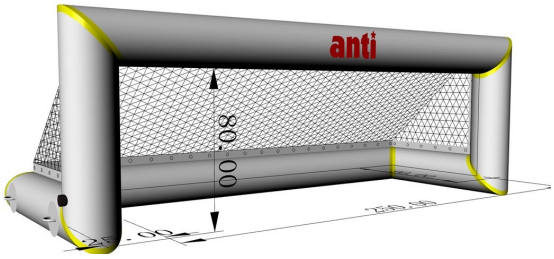

Above: Beach Polo (FINA) Model 2.5m x 0.8m x 1.1m

Above: Durable PVC Carry Bag and High Volume Foot Pump

Product Specifications:

- Heavy Duty marine grade PVC material with SS316 Fittings.
- Heavy Duty One-way Inflation Valves for reliable, straight forwards inflation and deflation with provided foot pump.
- 2pc Oversized SS316 D-rings located on each side of the Goal for simple connection of the Goal Line tethers from the side of the pool, or from behind to pool edge or bulkhead.
- HD Carry bag is designed to be slightly oversized in order to easily return the deflated goals to the bag, and to carry both the goal and foot pump, as well as other small items as needed.
- Black Net included, removable and replacable. Net is Pre-installed.
- Includes oversized Durable PVC Carry Bag with reinforced straps.
- Includes High Volume heavy duty foot pump (fits in bag) Puncture repair kit also included.

Inflatable Goal Models:

SNR Goal 3.00m x 0.9m x 1.2m (FINA), Colours: While with Red
BEACH POLO Goal (FINA) 2.50m x 0.8m x 1.1m, White with Yellow
JNR Inflatable Goal 2.15m x 0.75m x 1.0m, White with Green

CODE	PRODUCT	DESCRIPTION	WEIGHT	VOLUME
AWE495	ANTI SNR INFLATABLE GOAL	SNR Inflatable Goal with Net and Bag	13.5kg	0.13m³
AWE494	ANTI BEACH INFLATABLE GOAL	BEACH POLO Inflatable Goal with Net and Bag	12.0kg	0.11m³
AWE493	ANTI JNR INFLATABLE GOAL	JNR Inflatable Goal with Net and Bag	11.7kg	0.11m³
AWE492a/b/c	BLACK REPLACEMENT NET KIT	Suits AWE495/AWE494/AWE493	1kg	0.02m³
AWE000	ALL SPARE PARTS AVAILABLE	PLEASE ENQUIRE	-	-

Anti Wave Goal Targets

Anti Wave Goal Targets

The Anti Wave Goal Targets provide a simple and easily installed Goal Target for Water Polo Target training.

The Targets are easily installed to the goal frame top bar using supplied attachment points, and when s uccessfully hit by the shooter the Targets make an audible slapping sound.

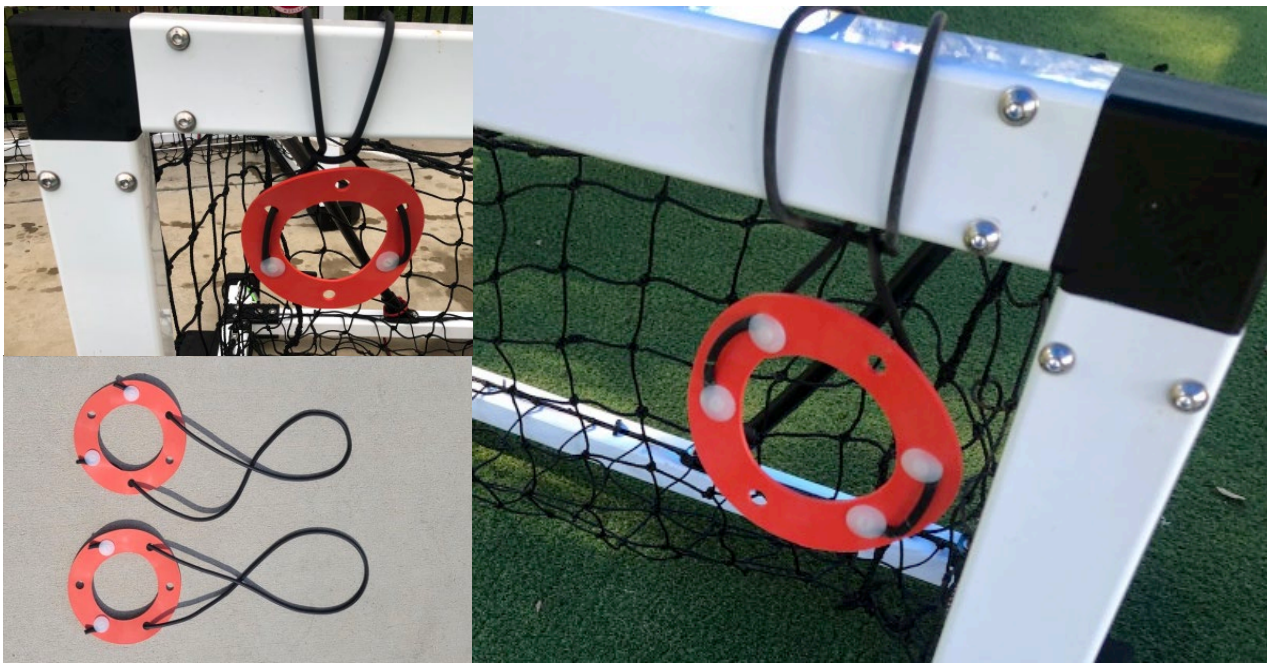

Above: Anti Wave Goal Targets - NEW

Key Features:

- Suitable for all clubs and pools from Juniors to top mens and womens teams.
- Simple, durable and easy to install design, suits all Goal Models
- Designed for ultimate durability in full sun conditions
- High visibility, durable advanced UV stabilised plastics construction
- Provides shooters with positive confirmation audible slap when successfully shot with the ball
- Does not damage or prematurely wear the balls with frequent use
- Can be installed to any location on the Top Frame bar for a variety of practice shots

CODE	PRODUCT	DESCRIPTION	WEIGHT	VOLUME
AWE590	Goal Targets	Suits all Goals.	0.01kg	0.01m^3
AWE590S	ALL SPARE PARTS AVAILABLE	PLEASE ENQUIRE	-	-

JNR Conversion Kit

JNR Goal Conversion Kit (suits all SNR and Anti Goals)

The Anti Wave JNR Conversion Kit provides a simple and innovative solution for clubs to conver their existing SNR & Anti Goals to JNR Goal face dimensions in a matter of seconds.

The Kit is secured to the Goals with supplied SS316 Wingnuts and once fixed firmly in place the Kit converts the SNR dimension Goals (3m x 0.9m Goal face) to JNR Dimension Goal Face.

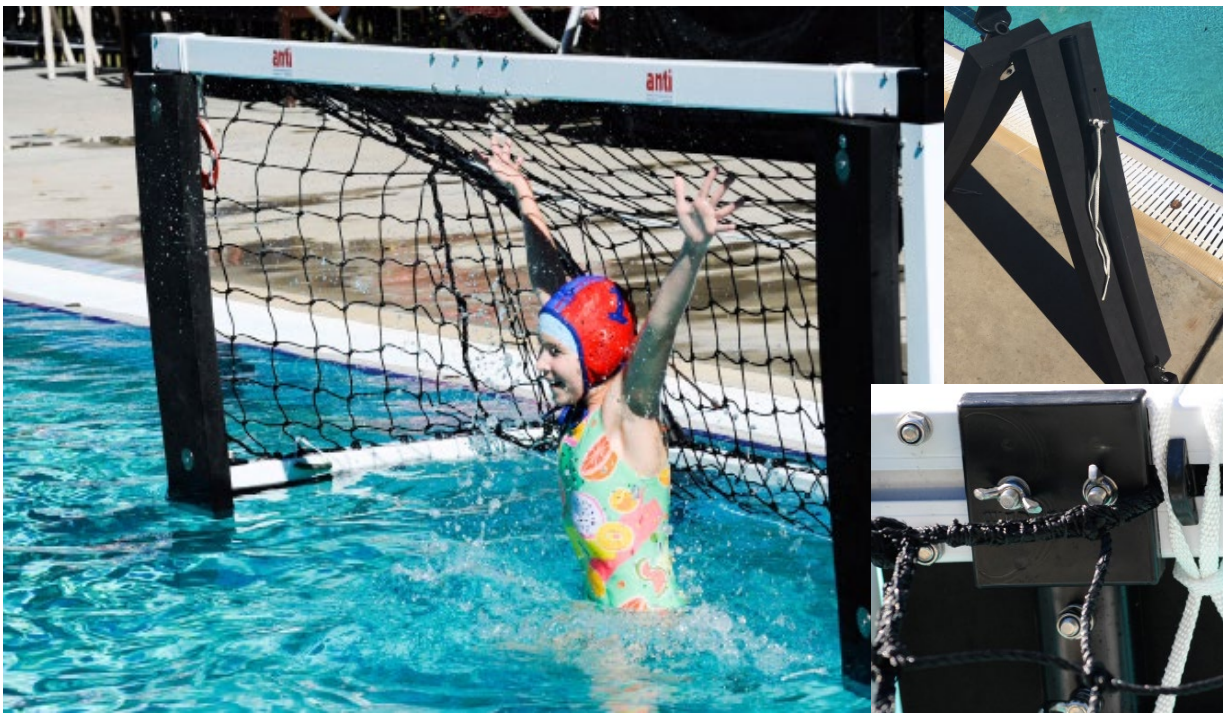

Above: JNR Goal Foam Conversion Kit, Yeronga Park Pool, Australia

Key Features:

- Quickly and easily converts an Anti Wave SNR Folding Goal or Anti Pro Goal to JNR Goal face dimensions.
- Installs in a matter of seconds via SS316 quick release wing nuts, installs into the existing Goal face channel.
- Durable HD PE Foam elements convert the goal face to the JNR Goal dimensions.
- Packs away into small volume, easy to carry and store.
- All fittings are non corrosive marine grade Nylon, and SS316.
- HD PE Foam Elements ensure no sharp corners or hard edges, safe for use with all ages.
- Kit includes all parts required to convert each 1pc Goal.
- Converts Goal face from 3m x 0.9m (SNR) to 2.6m x 0.9m(JNR).
- Made in Australia.
- Shipping Globally via flat rate UPS Air Courier to most OECD Countries.
- Direct online ordering available - please contact us.

CODE	PRODUCT	DESCRIPTION	WEIGHT	VOLUME
AWE333	JNR Goal Conversion Kit	Converst SNR Goal to JNR Goal	2.1kg	0.05m^3
AWE333S	ALL SPARE PARTS AVAILABLE	PLEASE ENQUIRE	-	-

Polo Game Start Up Set

Polo Game Start Up Set - FINA

The Polo Game Start Up Set ball release system provides a consistent and accurate start to every game.

The starting ring is held in place inside the playing field by easily removable weights resting on the pool floor. Each weight is 12kg.

The SS316 Pole is anchored to the pool deck by the SS316 Deck Hole Anchor. The start rope attaches to the SS316 pole quick release jaws.

At the start of play, the ring is pulled under the water, and the ball is released as players approach the ball.

Official Polo Field of USA Water Polo

Meets current FINA Regulations.

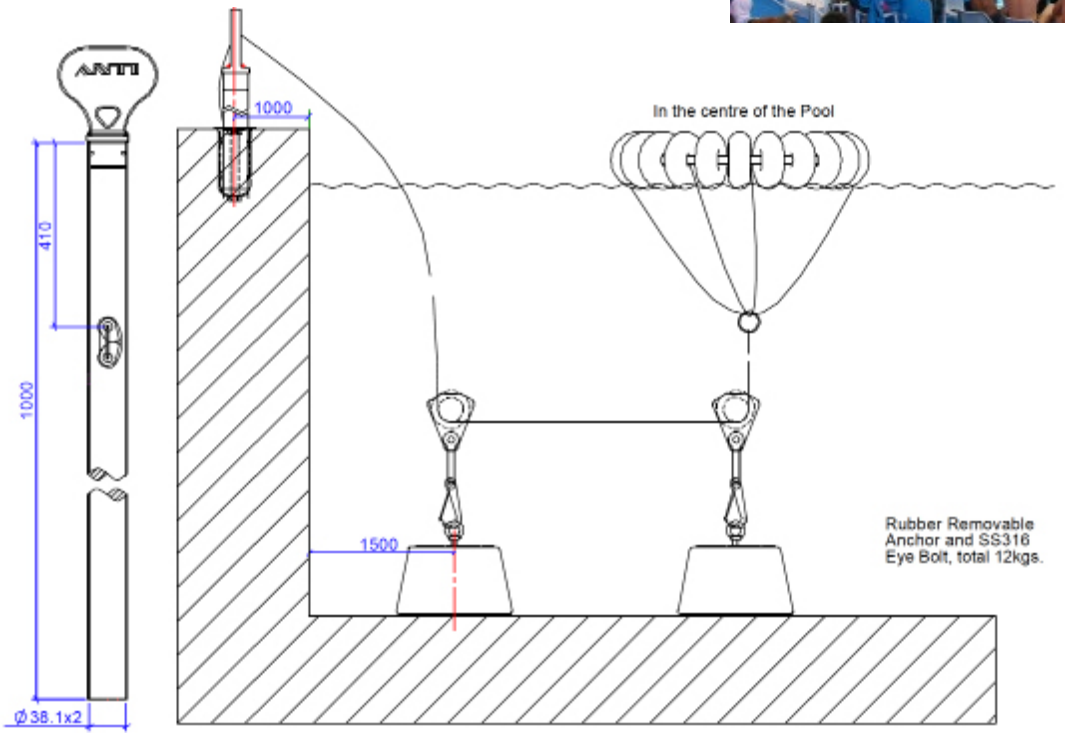

CODE	PRODUCT	DESCRIPTION	WEIGHT	VOLUME
AWE324	POLO GAME START UP	FINA Approved Start System	15KG	0.3m³
AWE323	WATER POLO FIELD LANES	MIDI 188m Men's / Women's	175 kg	3m³
AWE322	WATER POLO FIELD LANES	MAXI 188m Men's / Women's	300 kg	4.7m³

Water Polo Equipment

Players Bench

Players Bench • Polo Field

The Anti Wave Players Bench comes in a set of two benches with each bench seating 9 Players.

- Individual Seats mounted on a rugged powder coated aluminium frame.
- Rugged and weather proof with the provision for the display of team colours.

Referee Walkway

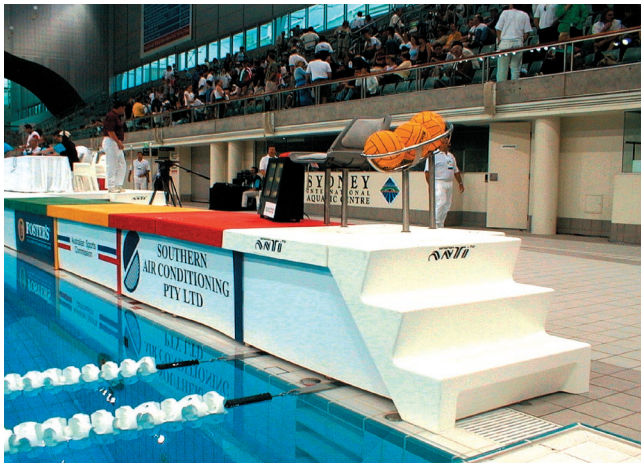

Referees Walkway • Goal Judge Station

The Anti Wave Referees Walkway provide a stable, elevated platform running the full length of the field.

- Surface is colour coded to comply with the latest Fina regulations and visible from the water.
- All fittings are SS316 stainless steel; folding aluminium supports are used together with UV-resis tant composite plastic, with custom moulded non-slip profile.

Officials Platform

The Officials platform provides sufficient space for official tables and equipment and is designed to allow of electronic cableing with access points in the deck protected by patented circular covers.

- Produced from hand laid Fibreglass for strength and durablility.
- Each unit is 1.0m x 1.25m to accomodate timing and game management systems.
- Access from the concourse is by sturdy composite plastic steps.
- For competetion, ten units, two rows deep are recommended (total of 20 units).

Anti Wave Officials Platform, FINA Competition 2019

CODE	PRODUCT	DESCRIPTION	WEIGHT	VOLUME
AWE316	PLAYERS BENCH SET	ALU - Set of 1, Seats 9 Players	130kg	2.82m^3
AWE321	REFEREE WALKWAY	GRP/ALU - FINA Spec	23 kg	0.16m^3

Water Polo Equipment

Goal Judge Chair & Polo Ball Holder

The Goal Judges Chair is produced from engineering plastics and aluminium and fixes either into the pool deck or the POLO walkway via SS316 Deck Hole Anchors.

- Produced from engineering plastics.
- Sold in sets of two (2), see table below.

Polo Ball holder is produced from high grade aluminium and fixes either into the pool deck or the POLO Walkway via deck hole fittings.

Junior Water Polo Caps

The Anti Wave Polo Caps are designed for Competition and training.

- Polo caps feature sturdy mesh construction and stitching with comfortable ear caps.
- Junior Sizes only.
- Each set of the Caps includes 12pc Blue caps, 12pc White Caps and 4pc Red Caps.

Water Polo Balls

The Anti Wave Polo Balls are durable, non-slip and highly visible in all lights.

- Suitable for standard competition and designed for grip, visibility and durability.
- Available in three sizes and colours.
- Sold individually.

CODE	PRODUCT	DESCRIPTION	WEIGHT	VOLUME
AWE320	OFFICIALS PLATFORM	GRP/ALU - FINA Spec	29 kg	0.20m^3
AWE318	GOAL JUDGE CHAIR	Set of 2 - Attaches to Walkway	14 kg	0.15m^3
AWE313	WATER POLO CAPS JNR	Set of 28, White and Blue w 2 red	3.0 kg	0.020m^3
AWE315	WATER POLO BALLS - Jnr	Each	0.27 kg	0.01m^3

Swim Lap Timing

Pace Clock (4 arms)

The Anti Wave Pace clock was designed specifcally for top training facilities, and combines excellent design with funcitonality.

- Dimensions are 900mm x 900mm and Pace Clock is designed for wall hanging with a 220V/240 drive socket.
- Multi-coloured hands provide clear and easy reading from the water level.
- Features UK manufactured custom made 220V/240V clock motor.
- Durable engineering plastics frame with acrylic Cover.

PaceClock (4 arms)

CODE	PRODUCT	DESCRIPTION	WEIGHT	VOLUME
AWE015	PACE CLOCK	220V - 4 Arm Lap Swim Time	18 kg	0.20m^3
AWE015a	MOTOR 220V	220V Motors to suit Pace Clock	-	-

Movable Bulkhead

Anti Wave Movable Bulkhead

The Anti Wave Movable Bulkhead sets the international standard for Bulkhead pool configuration and programmability.

Anti Wave has developed a high-precision corrosion resistant bulkhead that successfully meets all FINA regulations.

Anti Wave Bulkheads utilise cutting edge FRP production techniques to ensure precision tolerances and a clean aesthetic design that is complimentary to the Pool Deck.

Please visit us at www.anti.to to request an information package, or contact us for more information.

South East Asian Games Venue Bulkhead, 2019

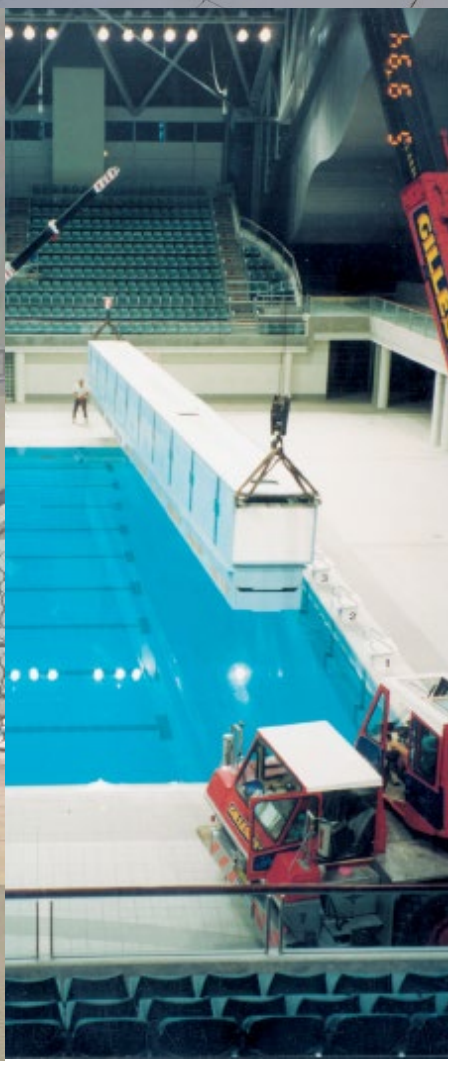

Innovation and Durability • Anti Wave Movable FINA Bulkhead, since 1985.

Submersible SwimWall

Anti Wave Submersible SwimWall System

The Anti Wave Submersible Swimwall is locked flat on the pool floor when not in use and can be raised in moments when required by introducing compressed air using supplied airlines into the Swim-Wal. The SwimWall is then locked into the upright position against the pool side, allowing quick and simple pool division for multiple activities.

The ability to span either half or all of the pool means even greater flexibility for pool programming.

The Submersible Swimwall is produced from FRP with internal bouyancy to permit manual operationg using supplied air lines. Vertical walls of the bulkhead are supplied with target markings in accordance with Fina regulations.

Provision is made for lane ropes to pass through the bulkhead as required, and for the connection of lanes to the Swimwall.

Please enquire for an information package or visit www.anti.to

Locked in 'up' position

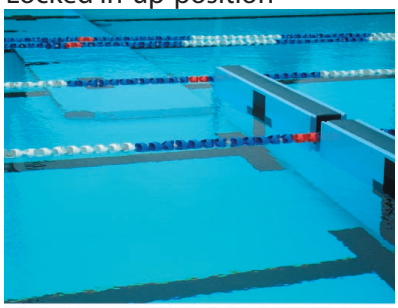

In 'down' position on pool floor

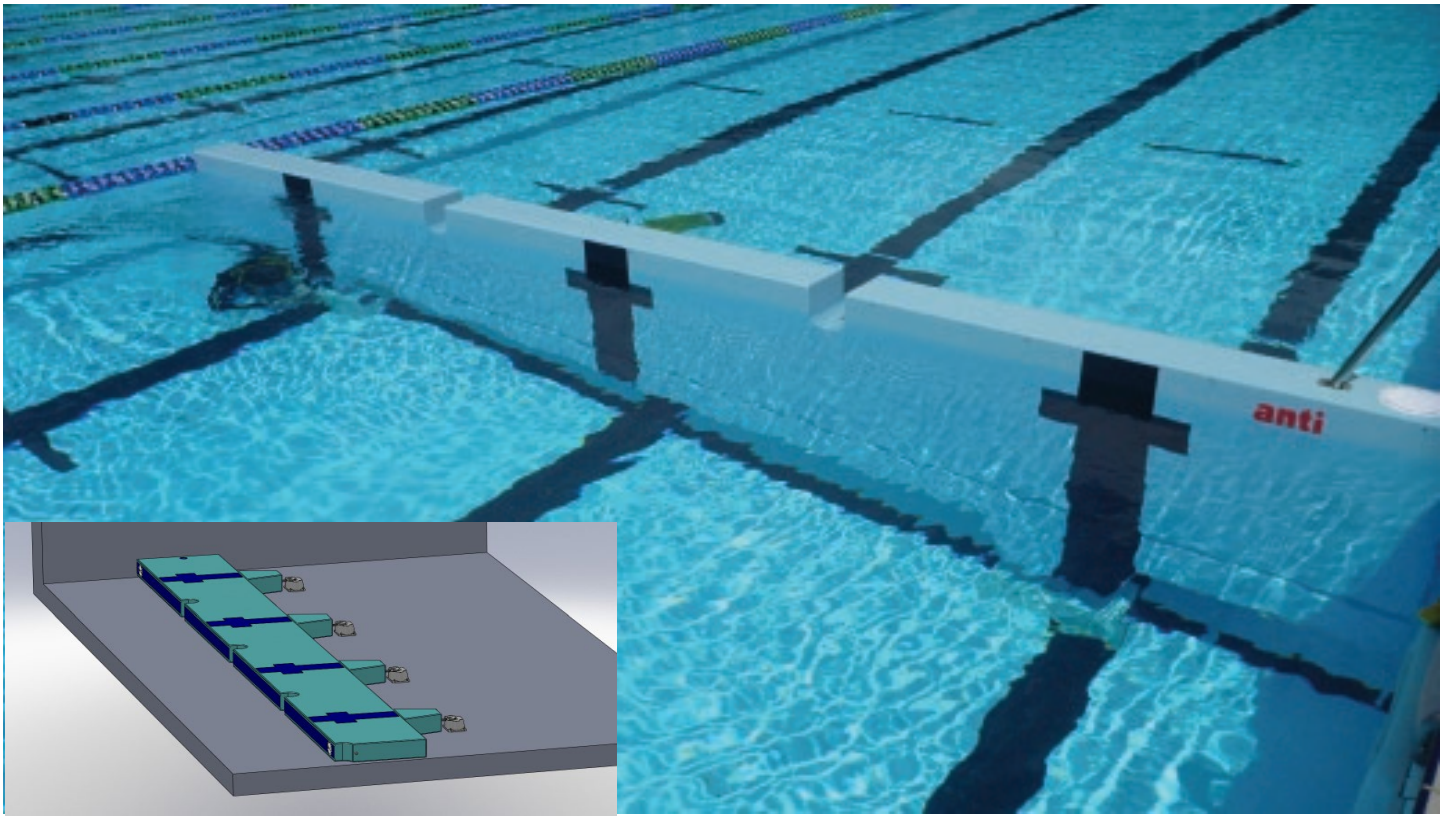

Anti Wave Submersible Bulkead in 'up' locked position, custom engineered for each project.

Anti Wave EndWalls

The Anti Wave Hitec Endwall is designed to provide a safe and efficient means of managing competition and fitness swimming in an overflow or 'wet deck' pool environment. Our advanced and innovatine Pultruded DRP EndWall is chemical and UV resistant in even the most demanding facility environments. Precision engineering and production ensure that FINA tolerances are maintained.

Key Features:

Suitable for competitive events and normal competition or training. Enables the installation of starting blocks and timing equipment in pools designed with overflow gutters.

- No exposed metal components
- No earthing required
- FINA Approved, suitable for competetive events and normal competition and training
- Enables the installation of starting blocks and timing in overflow pool environments
- Can be used with all popular timing systems including Omega, Daktronics and Colorado
- Simple, modular assembly and installation
- Gratings on top and sides ensure quick and easy cleaning of the channel with EndWall in place
- Constructed from extruded Fibre reinforced plastics
- Non-slip removeable Polypropylene gratings
- 316 stainless steel fixings (internal)
- Manufactured using UV inhibitors for ourdoor use
- Custom engineered solutions for each facility

CODE	PRODUCT	DESCRIPTION	WEIGHT	VOLUME
AWE024	HI TECH ENDWALL	White Extruded Plast 2.5m x 1m x 0.3m	100 kg	1.00m^3

EndWall - FRP

Anti Wave EndWall - Modular FRP

The Anti Wave Endwall is designed to provide a safe and efficient means of managing competition and fitness swimming in an overflow or 'wet deck' pool environment.

- Easy to install and simple to remove and store.
- Suitable for competitive events and normal com petition or training.
- Enables the installation of starting blocks and timing equipment in over flow pool environ ment.
- Movable gratings on sides ensure quick and easy cleaning of the channel with endwall in place.
- Can be used with most popular timing Systems and touch pads.
- Non-slip surface provides positive confirmation of the end of the pool to the swimmer as well as safe and speedy exiting of the pool.

Please contact us for more details.

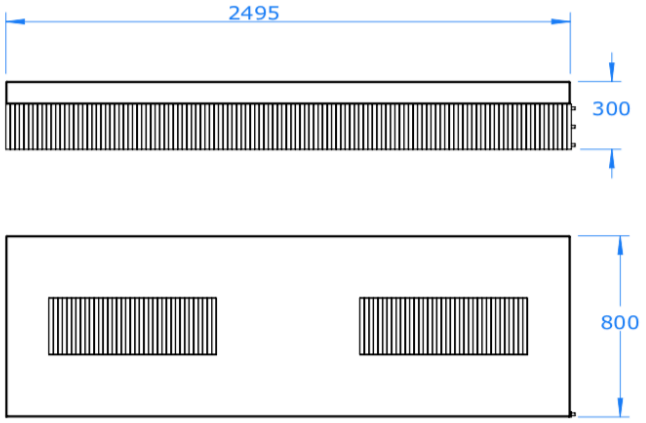

CODE	PRODUCT	DESCRIPTION	WEIGHT	VOLUME
AWE023	FRP ENDWALL	White FRP 2.5m x 0.7m x 0.3m	60 kg	0.80m^3
AWE024	HI TECH ENDWALL	White Extruded Plast FRP 2.5m x 1m x 0.3m	100 kg	1.00m^3
AWE000	PLEASE CONTACT US	FOR FURTHER DETAILS	-	-

Leisure Equipment

Frog Slide

Friendly and welcoming - the best frog ever made. The Frog Slide is a proven and safe attraction for children and can be placed in the wading pool or on the pool deck.

- No water flow required
- Material : GRP
- Dimensions : 1.8m wide, 3.8m deep and 1.9m in height.

Water Pole

Tipsy-Turvy buckets fill with water and spill over each other in an active water feature full of colour and surprise.

- Produced from rust-free advanced composite plastics.
- Water flows up the central pole and down the radial arms
- Water Flow: 1.5 L/s
- Feeder Pipe diameter: 20-50mm
- Dimensions : Approximately 3.1m high
- Bucket Capacity: 7L

Top, Anti Wave Frog Slide • Below, Water Pole

CODE	PRODUCT	DESCRIPTION	WEIGHT	VOLUME
AWE046	FROG SLIDE	1.9m High, FRP Construction	180 kg	12.86m^3
AWE024	WATER POLE	With Flip Cones, 4m High	53.7 kg	0.44m^3
AWE048	RAINDOME 1200mm	1200mm Diameter FRP	60 kg	2.0m^3
AWE049	RAINDOME 1600mm	1600mm Diameter FRP	75 kg	3.0m^3
AWE050	RAINDOME 2000mm	2000mm Diameter FRP	90 kg	4.0m^3

Company Information

Since 1972 Anti Wave products and designs have been exported to over 150 Countries around the world, and have continued to set the global standard for top performance innovation, design and product quality.

Anti Wave has a widespread and growing Global network of approved distributers and licensees, offering the most comprehensive and professional service and advice available.

Designed and tested in Australia, Anti Wave sets the highest standard in quality, service and innovation.

More information on all of our products can be found at www.anti.to or by email anton@anti.to
Online ordering of Global Anti Goals and Backstroke Ledges now available @ www.anti-wave.com

Anti Wave International Pty Ltd

Visit us online at www.anti.to

Anti Wave International Pty Ltd
Address : 65 Twelfth Avenue,
St Lucia QLD, Australia 4067
Anton Kajlich
Email : anton@anti.to
Web : www.anti.to

With a global network of Authorised Distributers and Licencees around the world.

Contact us to find your closest Reseller, or if you would like to become an Authorised Reseller in your country.

Anti Wave holds the following international Patents:
2001285610, 7100219, 4048677. 01818714 and 2003/2920

anti
ANTI WAVE - SINCE MUNICH 1972
SWIM • POLO • POOL DECK • LEISURE • BULKHEAD

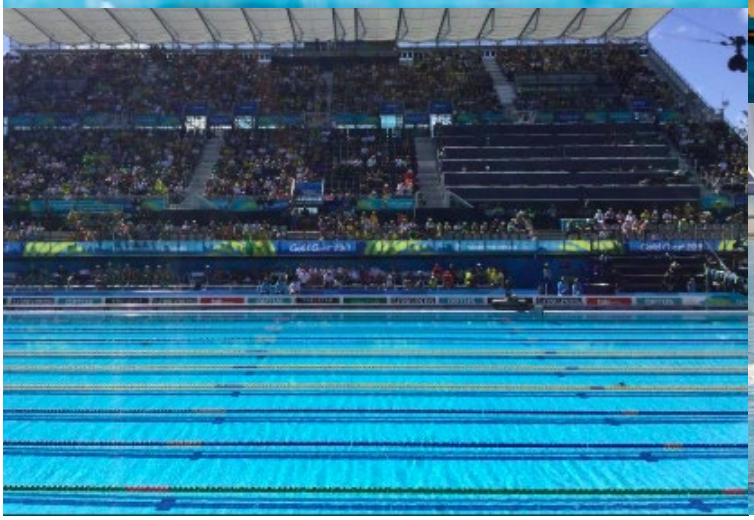

Anti Wave International Pty Ltd

Visit us online at www.anti.to

Online order available at anti-wave.com

(Global Anti Goals & BackStroke Ledges)

Anti Wave International Pty Ltd
Address : 65 Twelfth Avenue,
St Lucia QLD, Australia 4067
Anton Kajlich
Email : anton@anti.to
Web : www.anti.to

With a global network of Authorised Distributers and Licencees around the world.

Contact us to find your closest Reseller, or if you would like to become an Authorised Reseller in your country.

Anti Wave holds the following international Patents:
2001285610, 7100219, 4048677. 01818714 and 2003/2920